advanced projects in woodwork

Ira Samuel Griffith

Digitized by Google

THE UNIVERSITY OF MICHIGAN
LIBRARIES
THE UNIVERSITY OF MICHIGAN
ARTES SCIENTIA VERITAS
1817

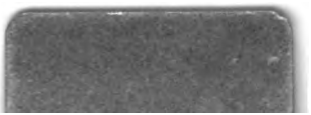

Digitized by Google

Digitized by Google

Digitized by Google

FURNITURE MAKING

ADVANCED PROJECTS IN WOODWORK

By Ira S. Griffith, A. B.

Chairman of the Manual Arts Department, the University of Missouri.
Author of "Wookwork for Beginners," "Essentials of Woodworking," "Carpentry"
"Woodwork for Secondary Schools," "Correlated Courses in Woodwork and Mechanical Drawing,"
and "Projects for Beginning Woodwork and Mechanical Drawing."

THE MANUAL ARTS PRESS
PEORIA, ILLINOIS

Digitized by Google

COPYRIGHT, 1912
IRA S. GRIFFITH

FOURTH EDITION, 1917

Digitized by Google

PREFACE.

ADVANCED PROJECTS IN WOODWORK is a collection of projects designed to meet the needs of classes in high school woodworking. These projects presuppose familiarity with woodworking processes, tools, and the two simple joints required in the making of projects contained in the author's *Projects in Beginning Woodwork and Mechanical Drawing*.

The drawings are complete only as to their general dimensions. The working out of details, such as the sizes of mortises and tenons and their locations, is left for the pupil in his work in drawing and design.

It is expected that the projects will afford suitable basic material for classes in woodworking design. It remains for the instructor to point out the manner in which this material may be used. For illustration, many beginning students are slow in appreciation of possible modifications in structure or decoration. Circular tops may be used instead of square or octagonal, and vice versa. Modification of the manner of filling side spaces with slats offers variety in initiative. Vertical posts may be made tapering and vice versa. Rails and stretchers may be variously employed. There is almost always a choice in the matter of joints,—keyed or thru or blind tenon. Fig. 1 is suggestive as to possible modifications of a type.

In addition to the possible structural modifications, the plates suggest variation in the matter of decorative ornament such as pierced and carved forms and simple inlay. Such ornament will, of course, be kept subordinate to the structural design.

The upholstering of stool tops and seats for chairs provides another problem in variation.

Little, if any, use is made of dowels as substitutes for the mortise-and-tenon. While it is true that modern commercial practice makes much use of dowels in this way, the author feels that such practice is too often contrary to the principles of good construction. Its genesis lies in economy of material rather than in any superiority as a fastening device.

In the designing of these projects the author has had in mind at all times the thought that most

329688

Digitized by Google

of the students using them would have access only to a band-saw or jig-saw and a miter-box in addition to the regular hand tool equipment. For this reason such projects as hall clocks, mission beds, etc., have been excluded. The exceptional student will find projects of sufficient size to

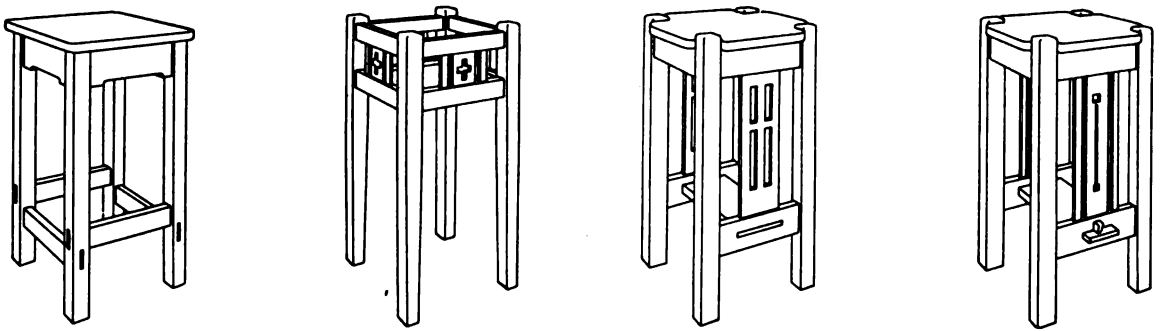

FIG. 1.

tax his ability and muscle. Easier projects and lighter projects have been provided for the weaker members of the class while the use of slats or their omission will provide additional variation in time of execution.

The use of stock ordered S-4-S (surfaced on four sides) has not been anticipated. The use of stock S-2-S and moldings such as are carried in stock by lumber yards is presupposed. If a working principle for the use of stock partly prepared were asked for it would be: Any material

Digitized by Google

that is carried as stock and which does not have to be ordered especially worked for the project a boy elects or designs may be made use of legitimately. Such a principle would permit the use of stock S-2-S, moldings of stock pattern, hardware such as hinges and locks without any suggestion of deception. It would exclude table legs and tops, etc., especially prepared at a mill, and offers a rational dividing line between two extremes, neither of which is desirable.

Of course, these projects may be used in the teaching of the use of woodworking machinery.

No definite notes as to methods of procedure are given in this book for the student is supposed to have acquired, thru experience with the projects in the elementary book, enough insight to enable him to proceed on his own accord. Definite instruction in making the new joints, in woodfinishing, etc. will be found in *Essentials of Woodworking*, or *Woodwork for Secondary Schools*, companion books by the same author.

While these projects are especially arranged for use with the courses outlined and discussed in *Correlated Courses in Woodwork and Mechanical Drawing*, by the author, there is nothing in the form of the plates themselves to prevent their being used with any course in woodwork.

July, 1912 IRA S. GRIFFITH.

The inking of the drawings and the making of the perspectives in this book is the work of Mr. George Gordon Kellar.

Digitized by Google

Digitized by Google

LIST OF PLATES.

GROUP IX.—Joinery.

1. Exercises—Keyed tenon, Blind Mortise-and-Tenon.
2. Exercises—Miter Joint, Glue Joint.
3. Exercises—Modeling, Hammer Handles.
4. Necktie Rack.
5. Footstool.
6. Book-rack.
7. Upholstered Stool.
8. Leg Rest.
9. Cricket.
10. Wall Shelves.
11. Stool (square).
12. Taboret (octagonal top).
13. Taboret (round top).
14. Small Table.
15. Taboret (square top).
16. Piano Bench.
17. Piano Bench.
18. Book Stand.
19. Umbrella Stand.
20. Umbrella Stand.
21. Jardiniere Stand.
22. Magazine Stand.
23. Roman Seat.
24. Light Stand.
25. Stool (square).
26. Book Trough.
27. Screen.
28. Tea Table.
29. Hall Rack.
30. Wall China Rack.
31. Side Chair.
32. Arm Chair.
33. Morris Chair.
34. Electric Reading Lamp.
35. Pedestal.
36. Occasional Rocker.
37. Mission Chair.
38. Drop Leaf Table.

GROUP X.—Cabinet Work.

39. Exercises—Mortise-and-Tenon Joint, Rabbeted Joint, Grooved Joint.
40. Exercises—Thru Multiple Dovetail, Half-blind Dovetail.
41. Waste Paper Box.
42. Wall Cabinet.
43. Telephone Table.
44. Sewing Cabinet.
45. Writing Table.
46. Chafing-dish Stand.
47. Cabinet.
48. Library Table.
49. Writing-desk.
50. Dressing Table.
51. Linen Chest.

Digitized by Google

PRICE LIST FOR YEAR 19____, 19____

LUMBER—Quality, 1st, clear, and kiln-dried.

KIND OF WOOD	Per 1000 feet when surfaced on two sides							
Thickness in the Rough	3/8"	1/2"	5/8"	3/4"	1"	1 1/4"	1 1/2"	2"
Yellow Poplar								
White Pine								
¼ Sawed White Oak								
Mahogany								
¼ Sawed Red Sycamore								
Black Walnut								
Plain Sawed Red Oak								

HARDWARE—
For prices on hardware consult Hardware Catalog provided for you.
Figure retail price, that is, figure screws at price per dozen, not price per gross.

WOODFINISH—
Per square foot of surface covered.

LABOR—
Per hour.

Digitized by Google

(Form for high school use)

BILL OF MATERIAL

NAME_____ DATE BEGUN_____

CLASS_____ DATE FINISHED_____

ARTICLE_____ EXTRA HOURS _____

Pieces	Size	Description	Price	Feet	Cost			
2	½ x 3¼ x 12½	Walnut Slats S-2-S to ⅜ in.						
1	1 x 8¼ x 14½	" Stretcher " ⅞ in.						
6	1 x 3¼ x 12½	" Rails " "	.10	4.4		.39		
1	1 x 14¼ x 14½	" Top " "						
4	1½ x 1½ x 24½	" Posts " 1¼ in.	.11	2		.22		.66
8	2 inch No. 10	Flat Head Brt. Screws	.00½			.04		
4	1½ inch No. 10	" " " "	.00¼			.01		.05
	13 sq. feet	Wood Finish	.01					.13
		MATERIAL COST..	.....	.....	.....	.....	.....	.84
	30 hrs.	Labor	.15				4	.50
								TOTAL COST $5.34

Digitized by Google

INSTRUCTIONS FOR MAKING BILL OF MATERIAL.

Under "pieces" put the number of parts that are alike.

Under "size" put the various dimensions of pieces. In finding the sizes of the various pieces of lumber, examine the working drawings for finished dimensions, making due additions for tenons, then add ¼" to the width and ½" to the length to allow for cutting out and squaring up. Tho you are to make use of stock mill-planed to thickness, you are to specify the thickness from which this mill-planed stock is got. Allow at least ⅛" for mill-planing.

Remember that length always means along the grain.

Fractions of an inch in width and length are not considered. Neither are fractions of a cent in the final results. If the fraction is ½ or over, take the next higher whole number. If it is less than ½, drop it. Fractions of an inch in thickness that are over 1" and fractions of a cent in the price per foot are to be figured as they are.

Lumber is measured by the superficial foot which is 1" x 12" x 12". Boards that are less than 1" thick are sold by surface measure. In other words, boards less than 1" thick are figured for quantity as 1" thick.

Standard sawed thicknesses are 1", 1¼", 1½", 2", 2½", 3", 3½", 4". Thicknesses less than 1" necessitate re-sawing these sizes. In some communities the price per square foot for re-sawed stock varies for each difference of ¼" in thickness.

In figuring, multiply the length by the width by the thickness, by the number of pieces. If any piece is less than 1" thick figure it as 1". Combine all results that are the same in price per foot. Reduce to square feet by dividing by 144. Reduce decimally and do not carry the result beyond tenths place. Dispose of any fractional part beyond tenths as directed above.

The price list gives the price of lumber per 1,000 feet. The price per foot is readily obtainable.

In figuring finish for these cabinet pieces, double the number of feet of stock as given by the stock bill to get the number of feet of finish. This is only an approximate method but is sufficiently accurate for such pieces as are to be made in first year high school, as specified in Group IX of this book.

Digitized by Google

EXERCISE (PREPARATORY TO GROUP IX)

KEYED TENON

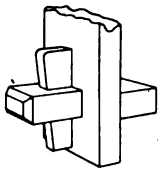

BLIND MORTISE AND TENON

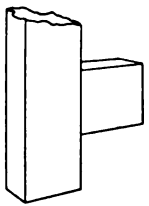

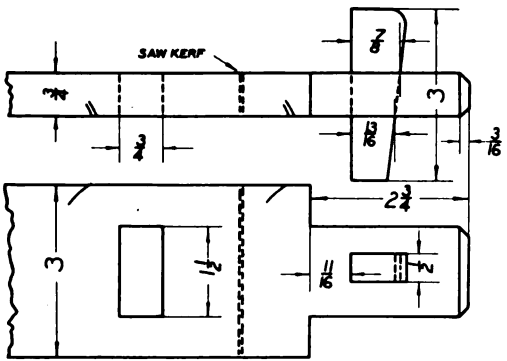

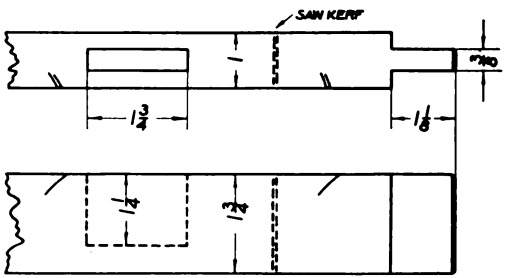

PLATE 1

Digitized by Google

EXERCISE (PREPARATORY TO GROUP IX)

MITER JOINT

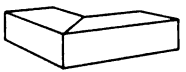

GLUE JOINT-DOWELING

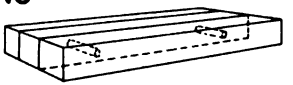

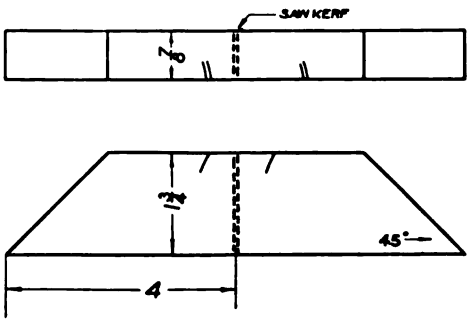

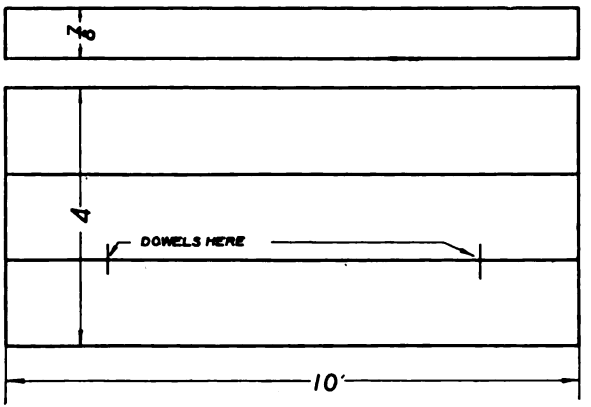

PLATE 2

Digitized by Google

EXERCISE PREPARATORY TO GROUP IX
(CHOOSE ONE)

HANDLE FOR BALL PEEN HAMMER

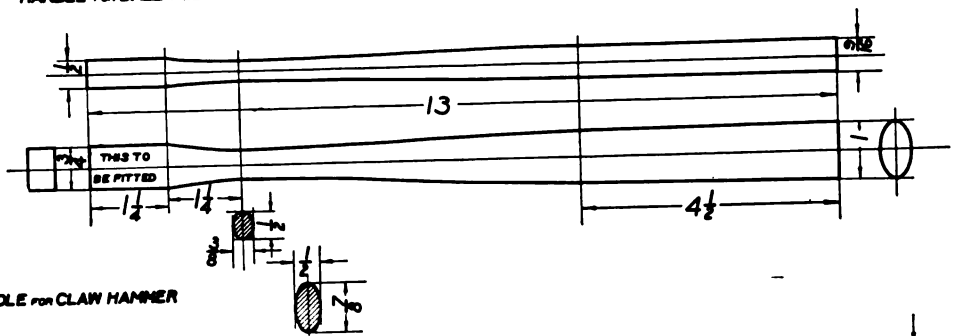

HANDLE FOR CLAW HAMMER

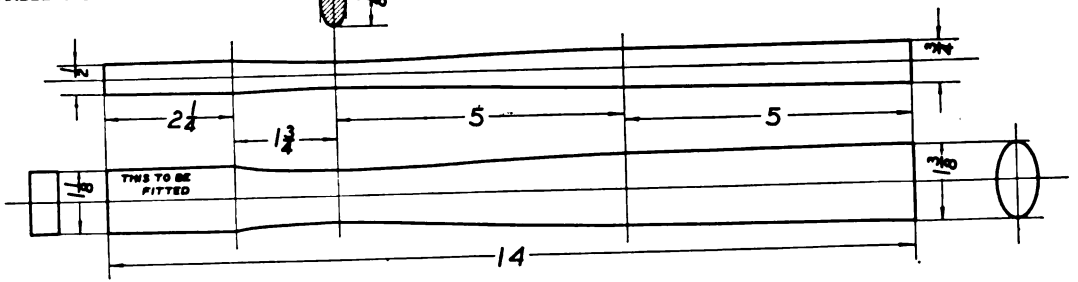

PLATE 3

Digitized by Google

NECKTIE RACK

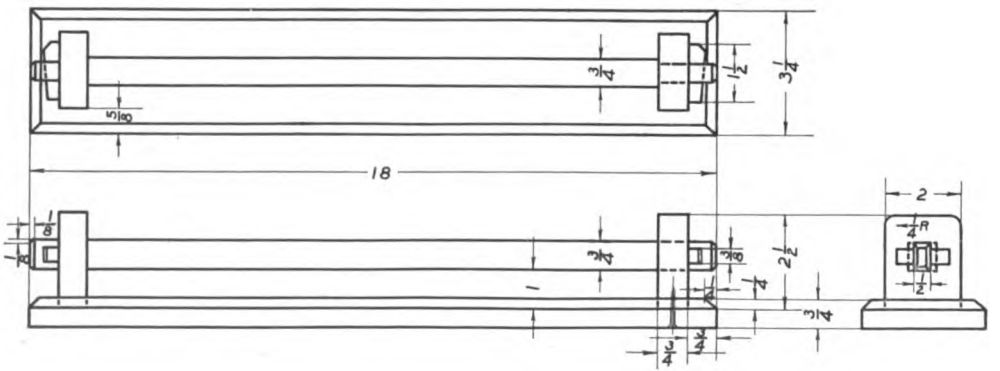

PLATE 4

Digitized by Google

FOOT STOOL

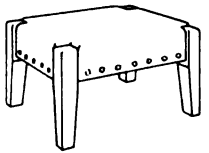

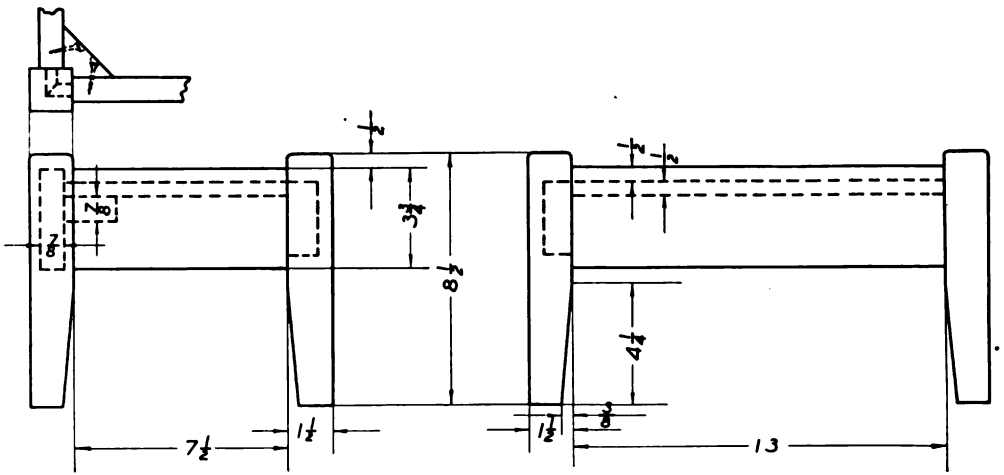

PLATE 5

Digitized by Google

BOOK RACK

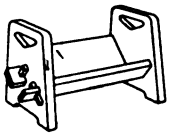

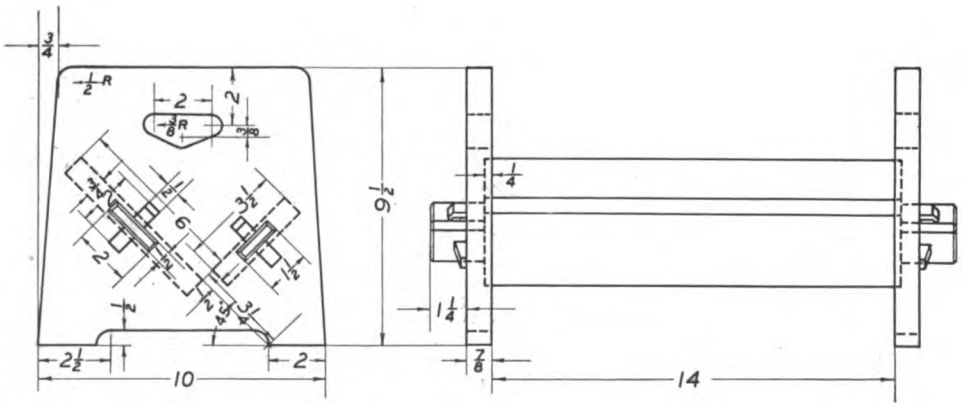

PLATE 6

Digitized by Google

UPHOLSTERED STOOL

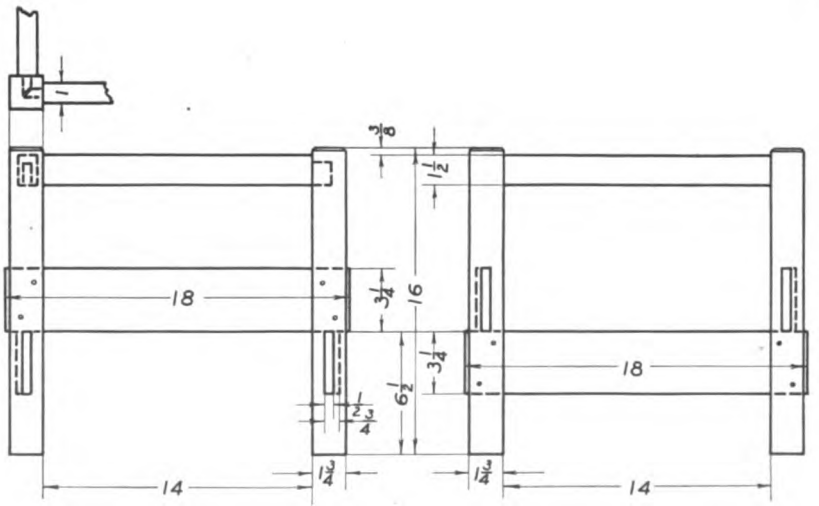

Digitized by Google

LEG REST

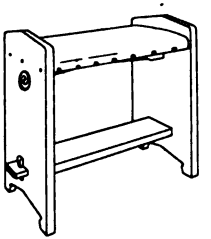

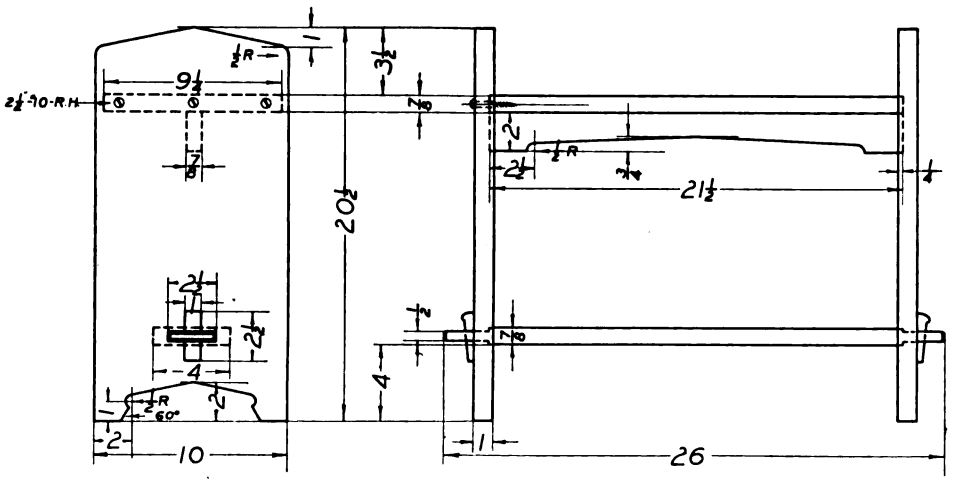

PLATE 8

Digitized by Google

CRICKET

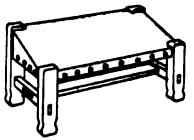

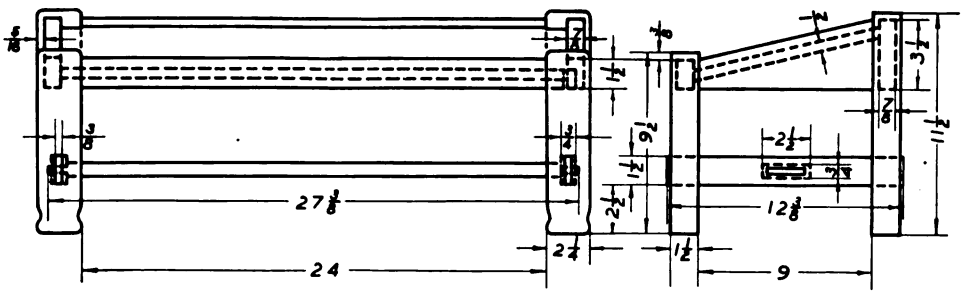

PLATE 9

Digitized by Google

WALL SHELVES

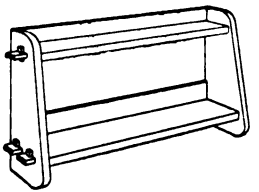

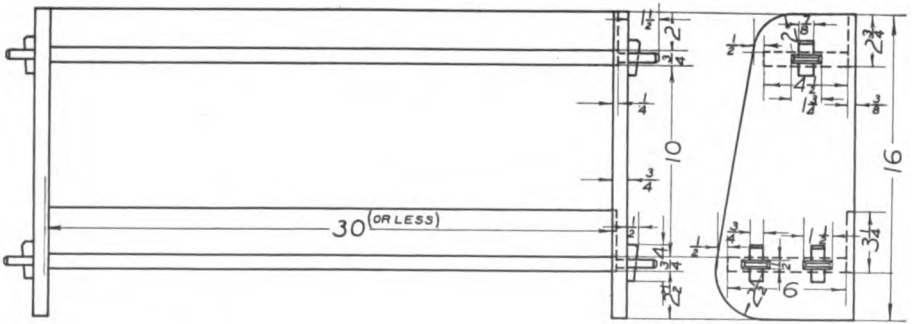

PLATE 10

Digitized by Google

STOOL

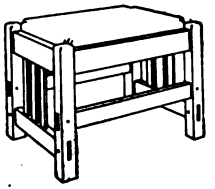

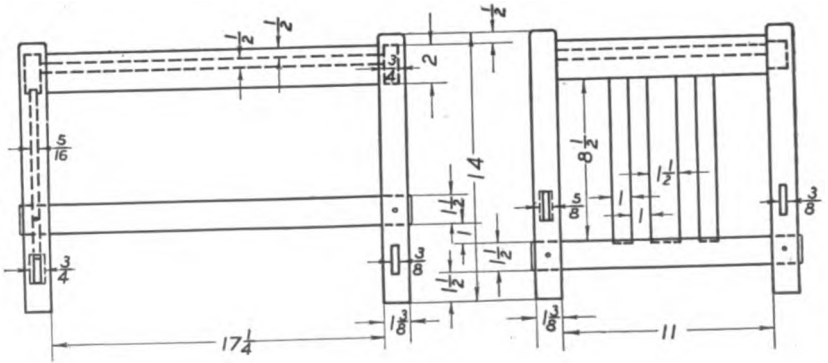

PLATE 11

Digitized by Google

TABORET

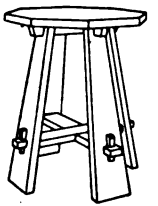

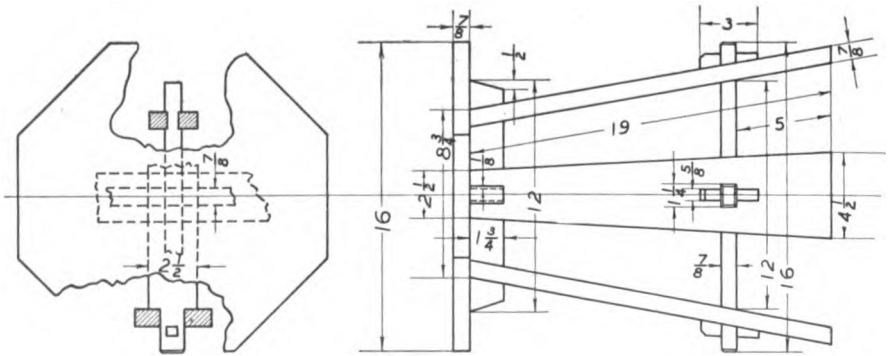

PLATE 12

Digitized by Google

TABORET

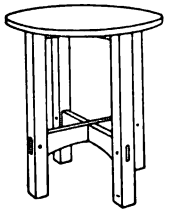

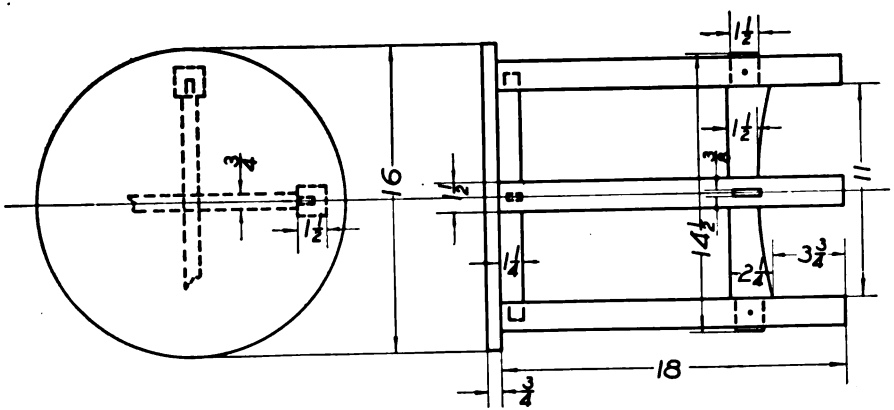

PLATE 13

Digitized by Google

SMALL TABLE

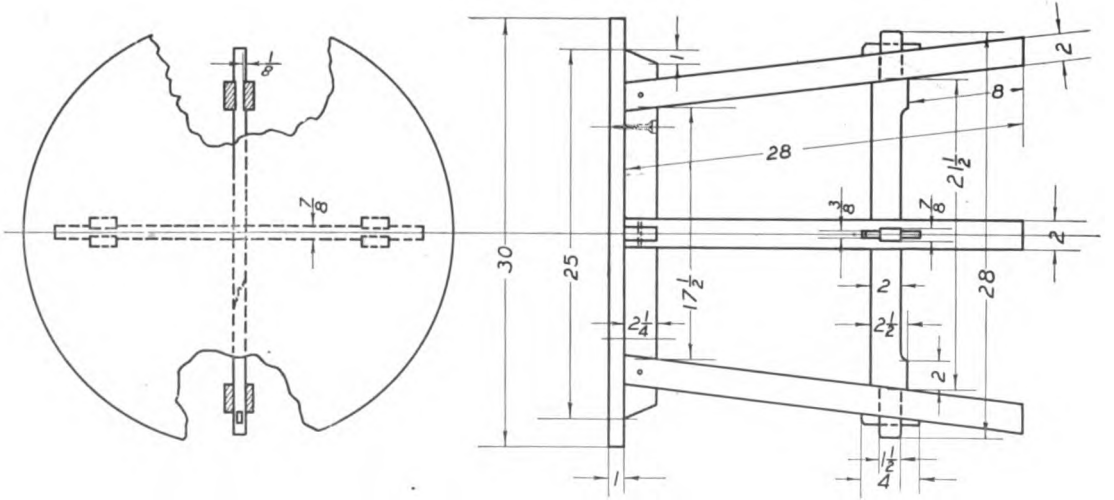

PLATE 14

Digitized by Google

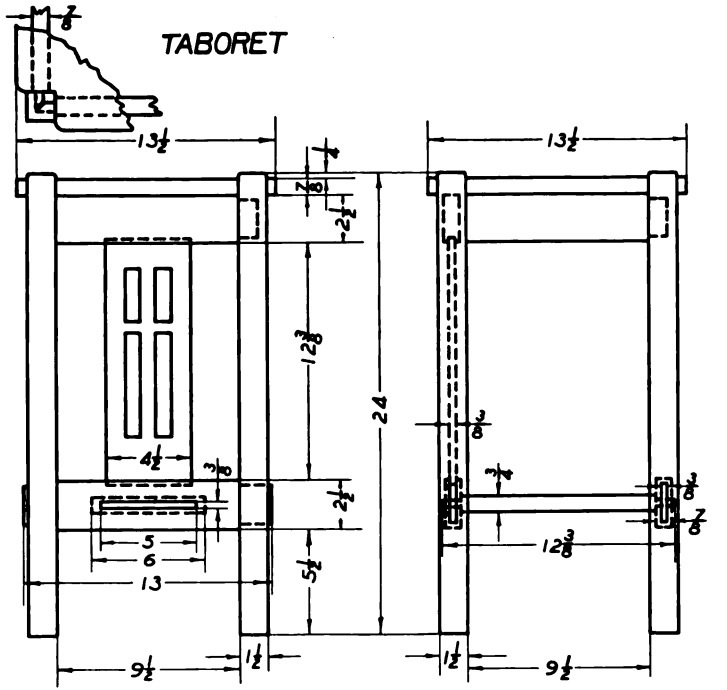

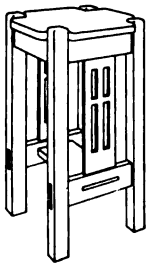

PLATE 15

Digitized by Google

PIANO BENCH

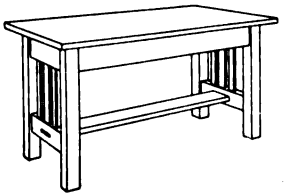

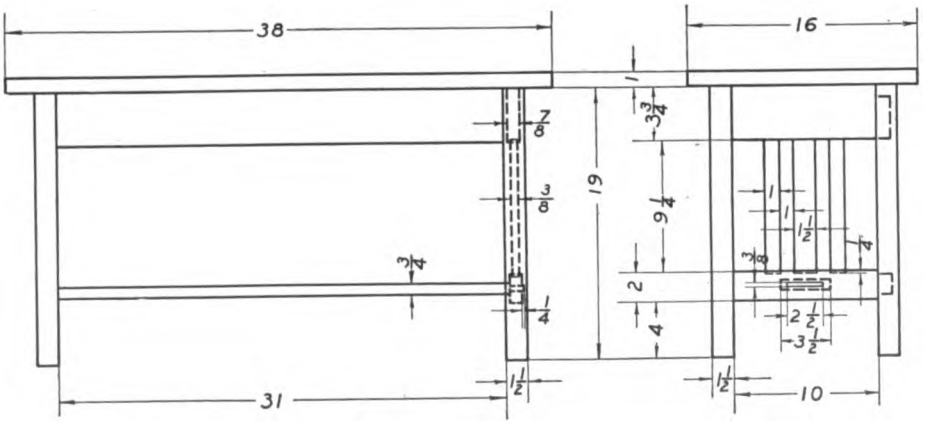

PLATE 16

Digitized by Google

PIANO BENCH

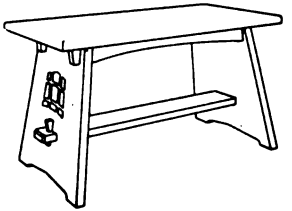

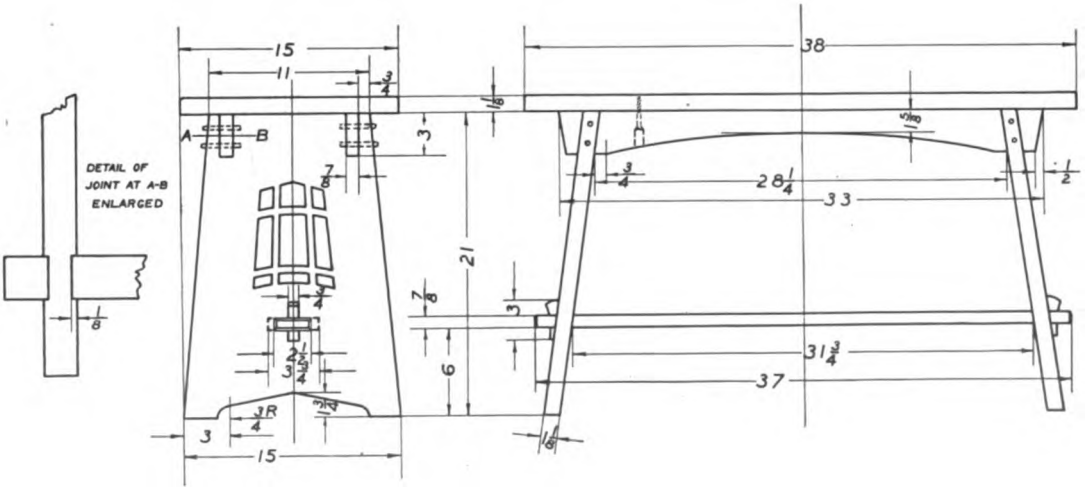

PLATE 17

Digitized by Google

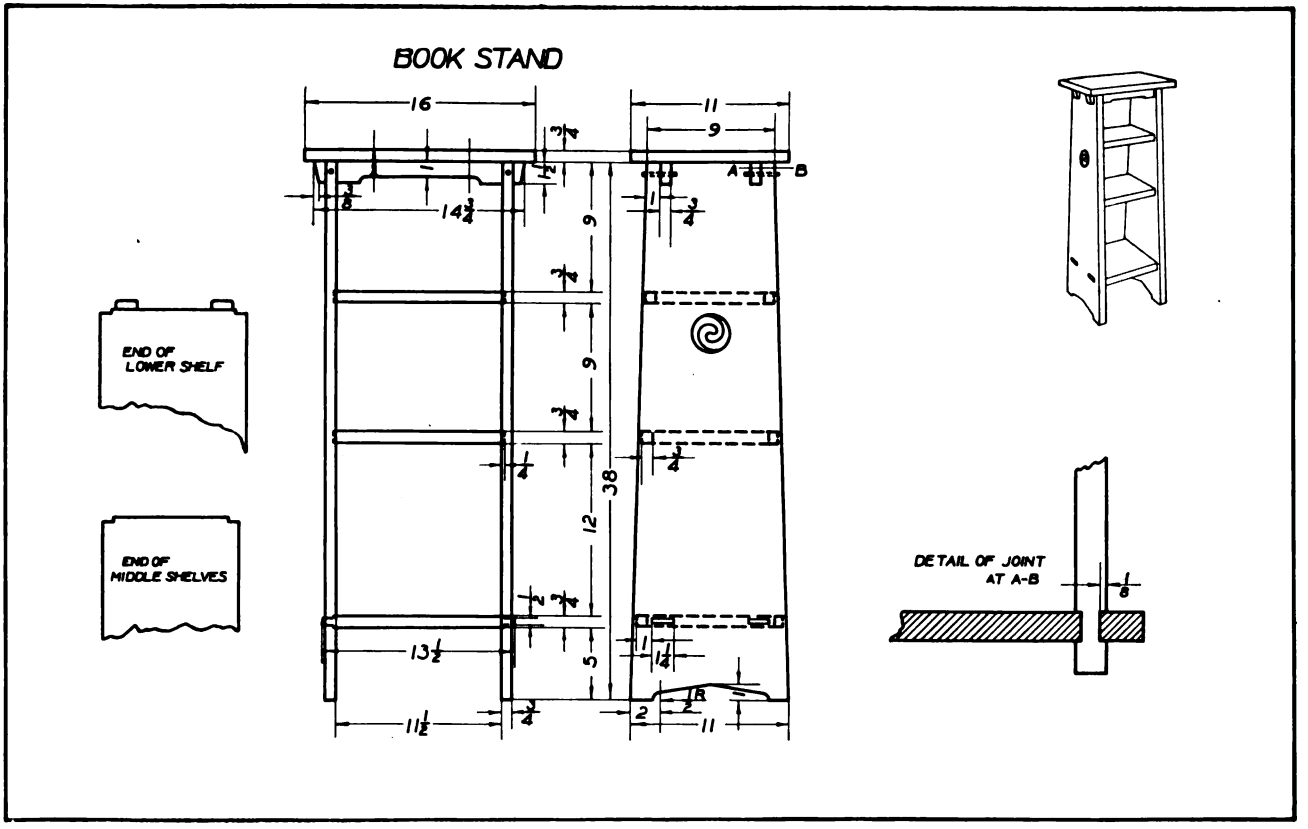

PLATE 18

Digitized by Google

UMBRELLA STAND

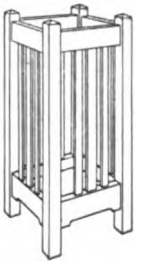

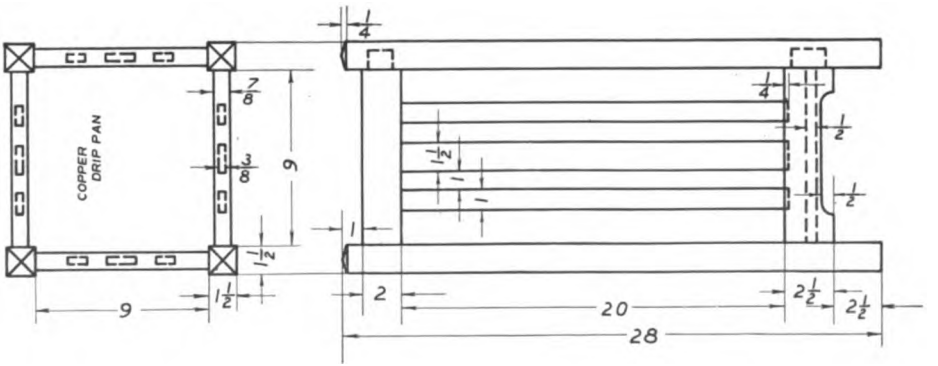

PLATE 19

Digitized by Google

UMBRELLA STAND

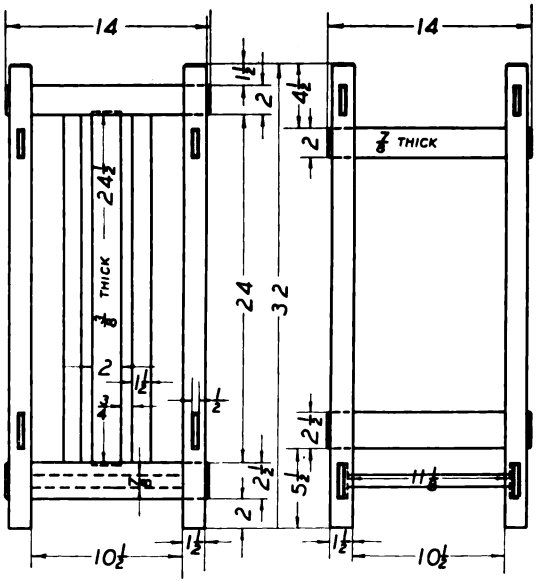

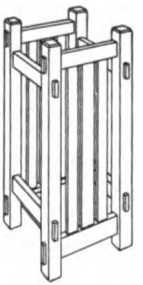

PLATE 20

Digitized by Google

JARDINIERE STAND

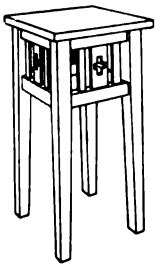

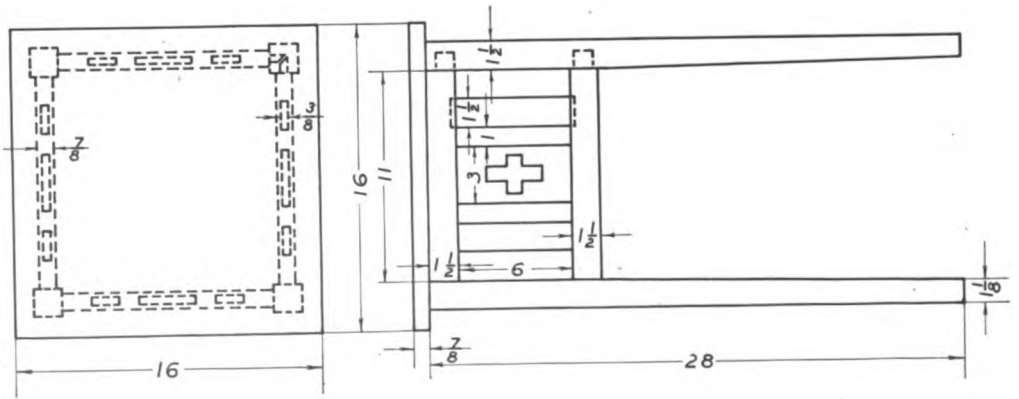

PLATE 21

Digitized by Google

MAGAZINE STAND

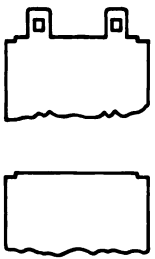

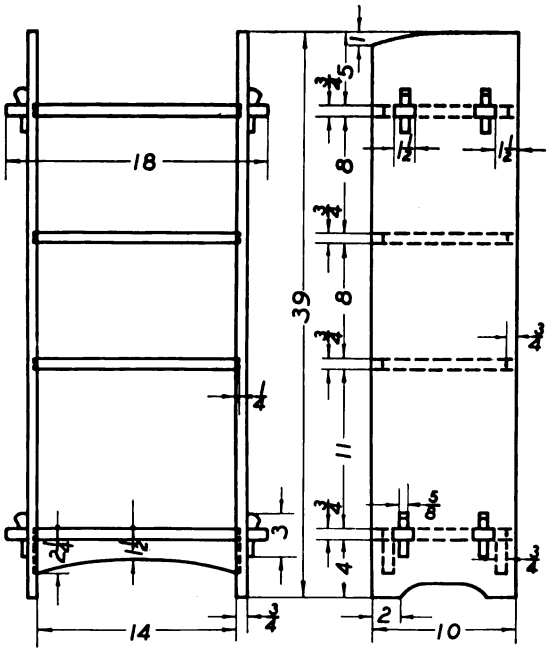

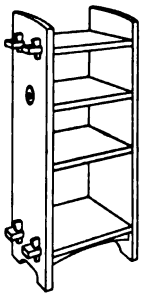

PLATE 22

Digitized by Google

ROMAN SEAT

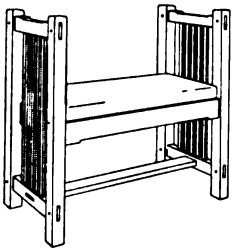

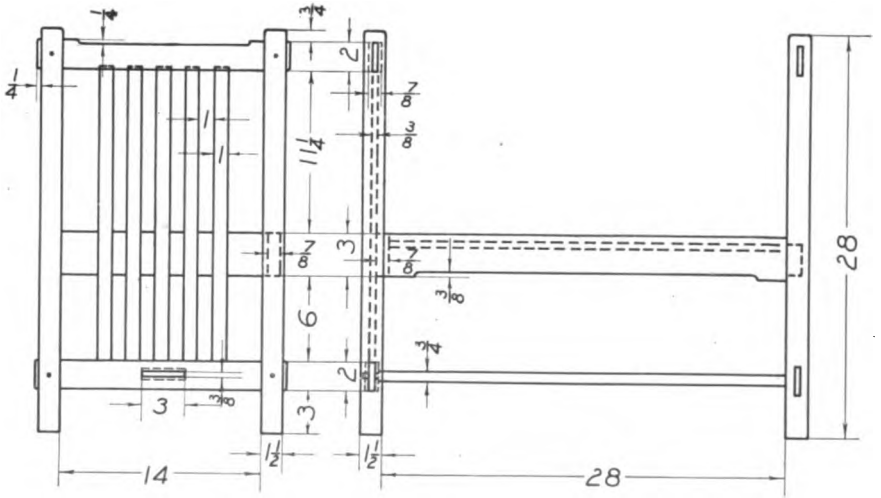

Digitized by Google

LIGHT STAND

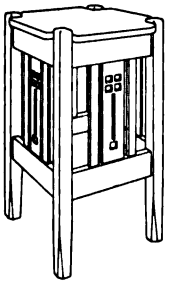

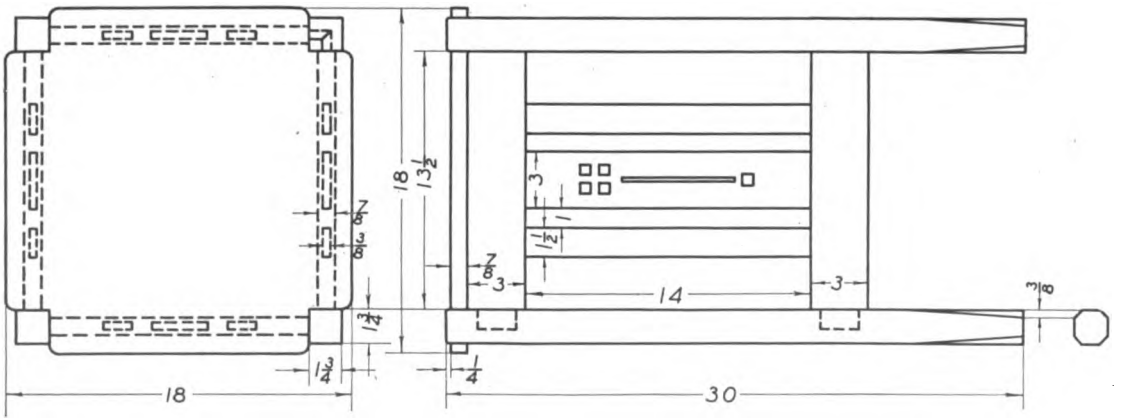

PLATE 24

Digitized by Google

STOOL

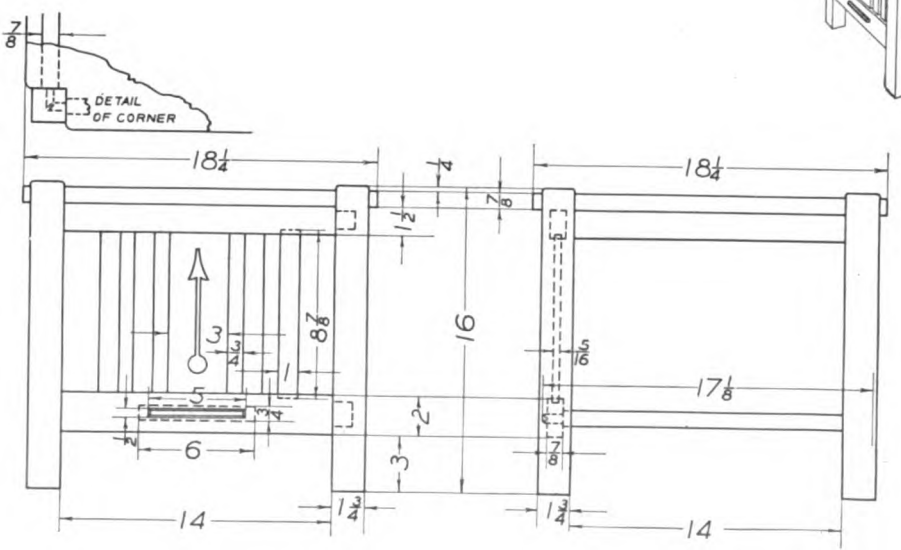

PLATE 25

Digitized by Google

BOOK TROUGH

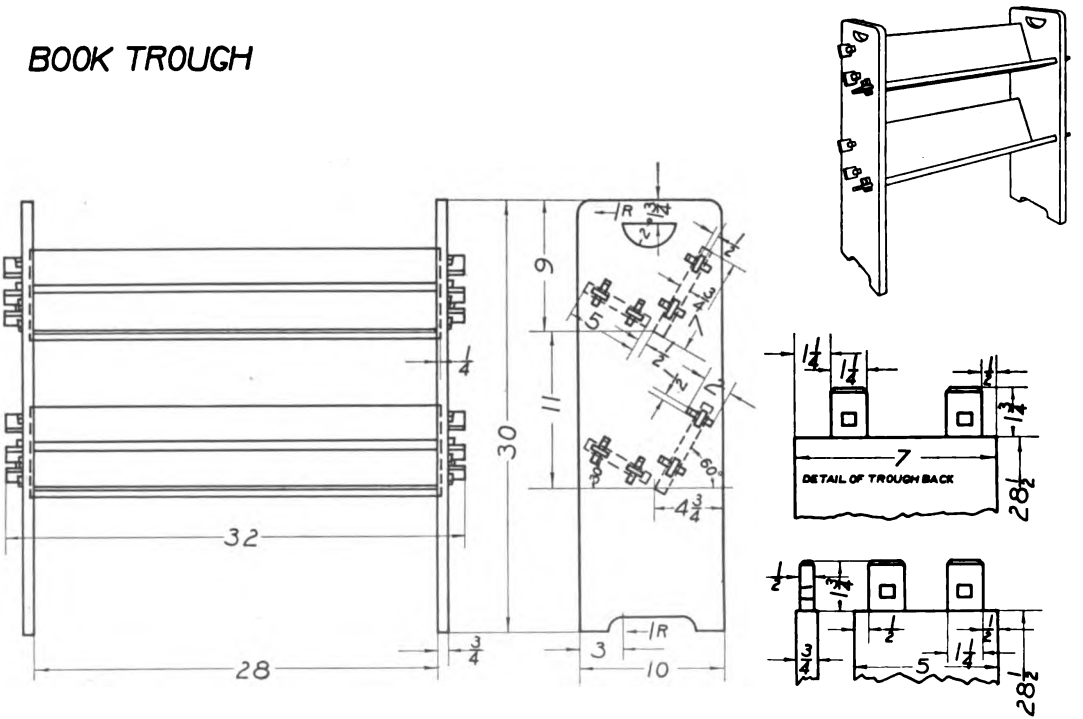

PLATE 26

Digitized by Google

SCREEN

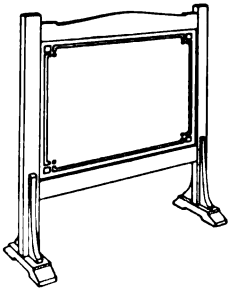

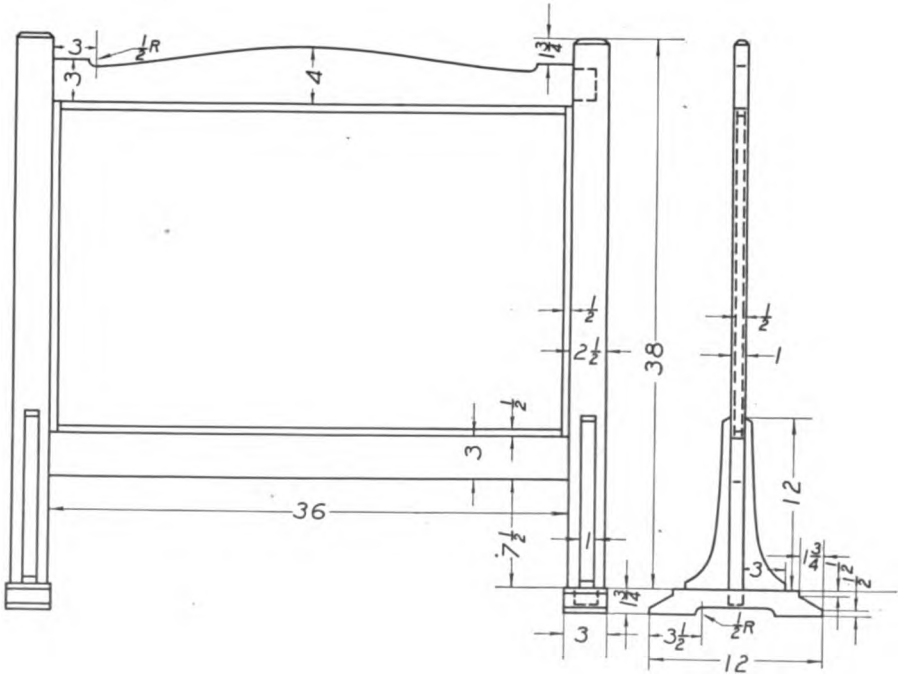

PLATE 27

Digitized by Google

TEA TABLE

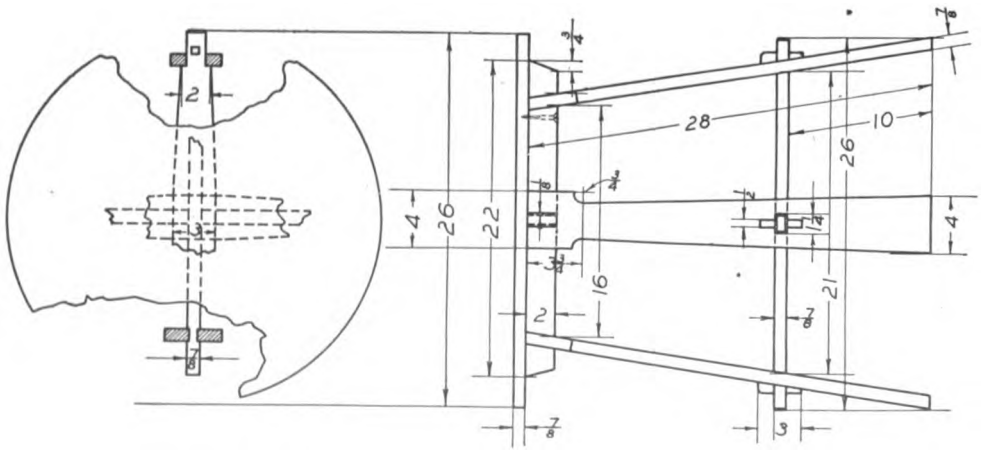

PLATE 28

Digitized by Google

HALL RACK

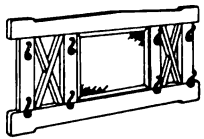

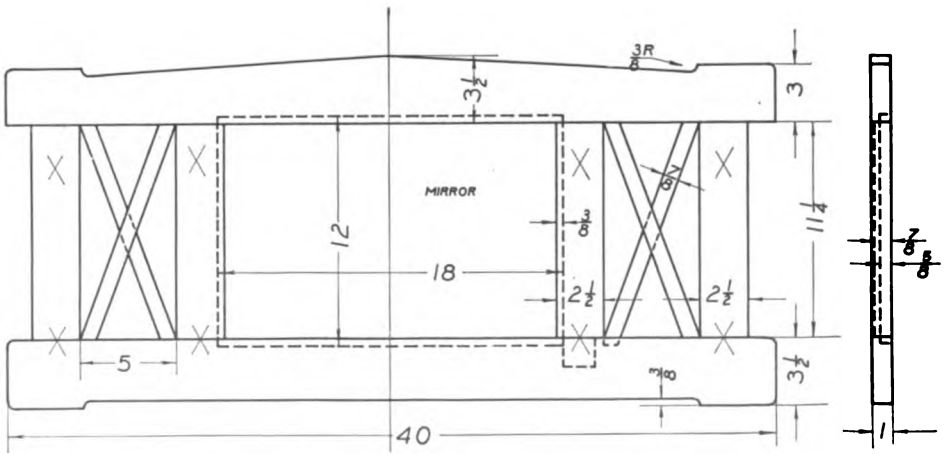

PLATE 29

Digitized by Google

WALL CHINA RACK

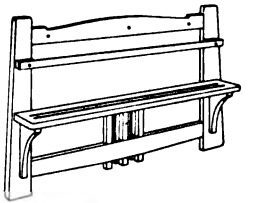

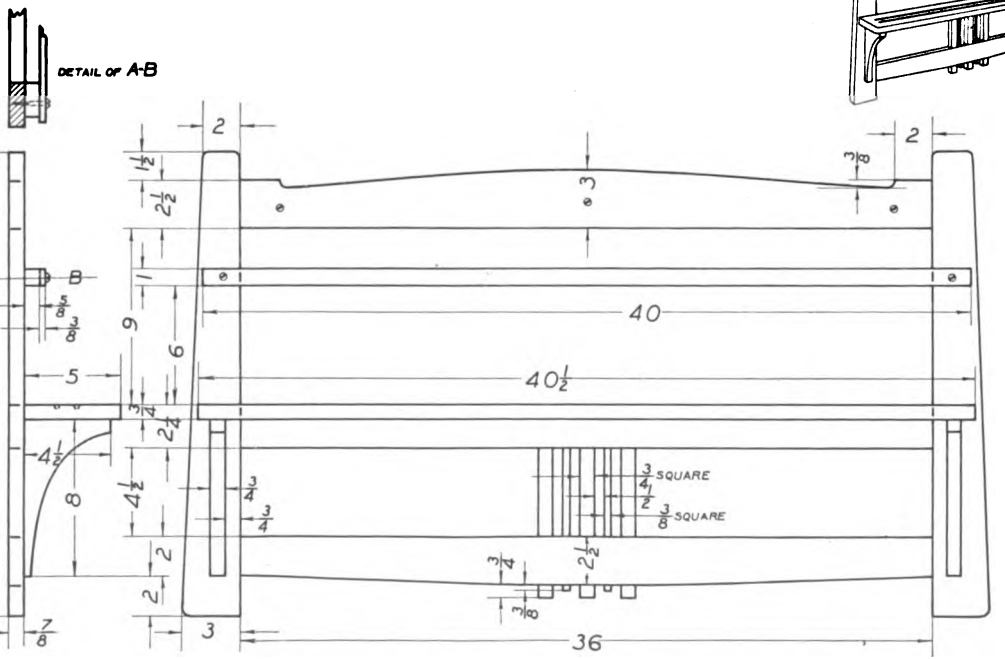

PLATE 30

Digitized by Google

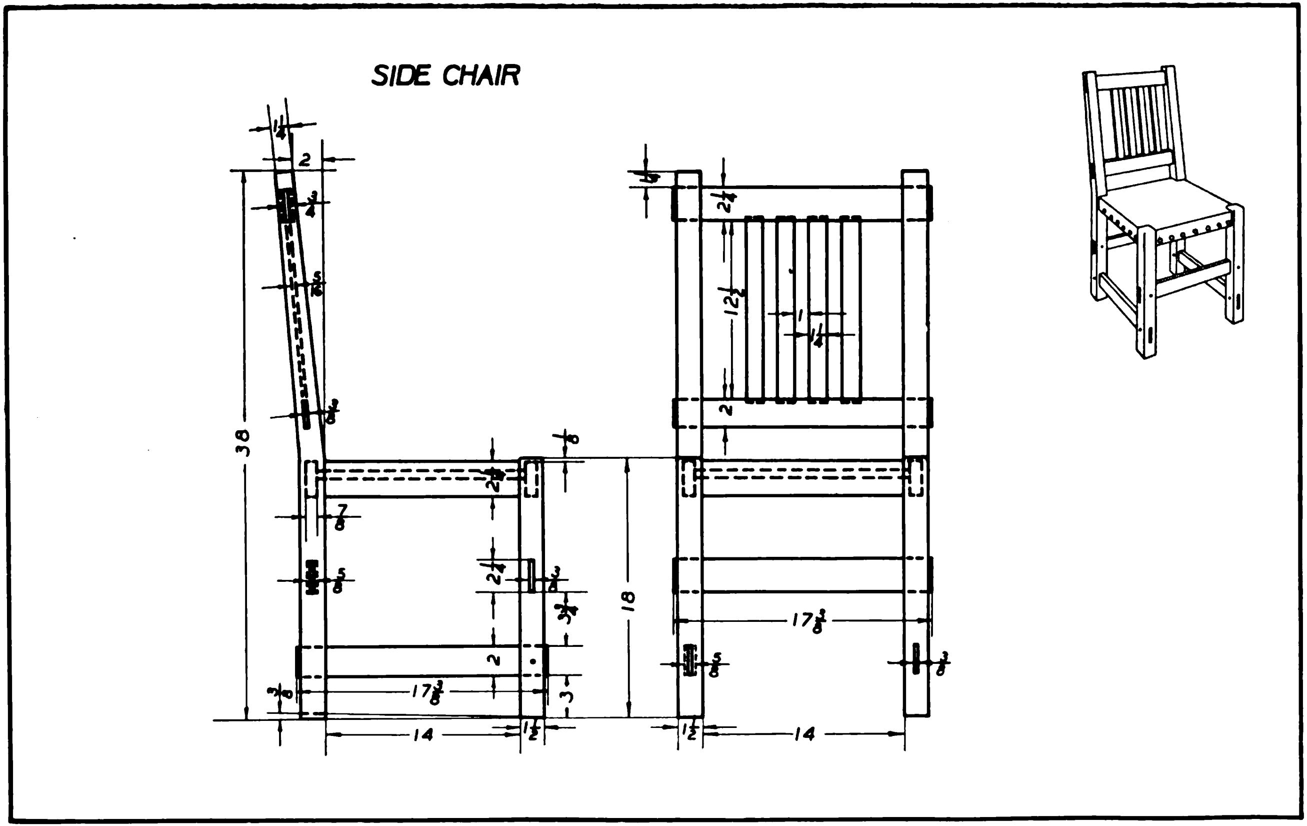

PLATE 31

Digitized by Google

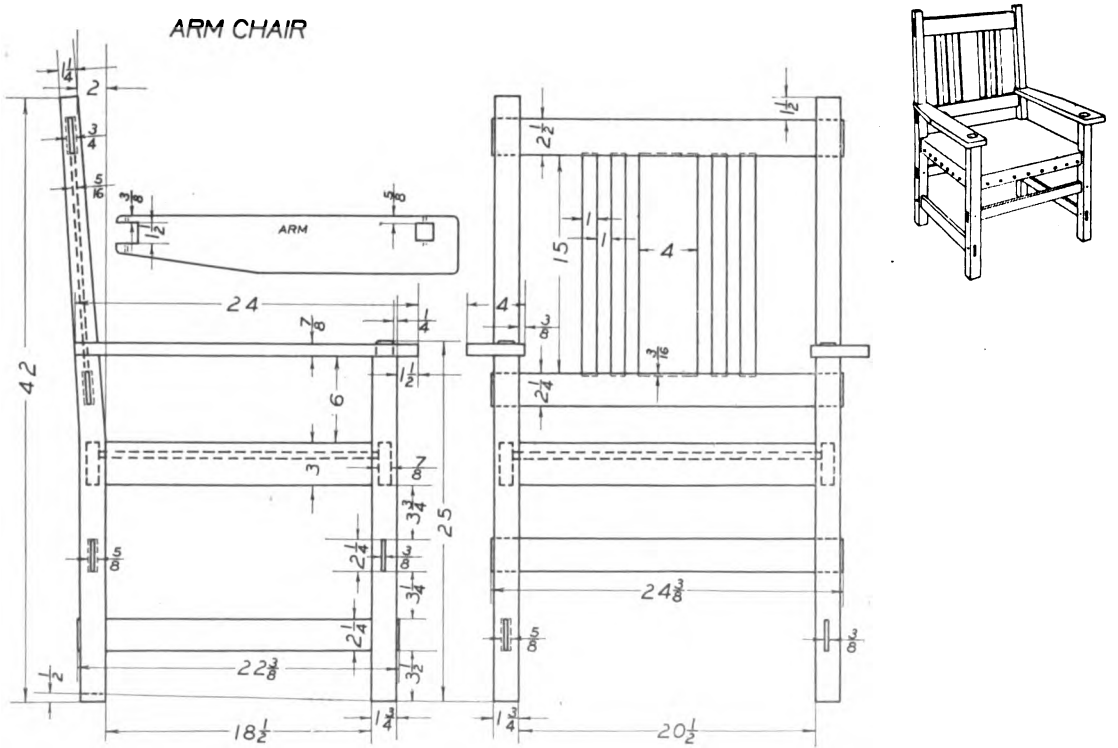

PLATE 32

Digitized by Google

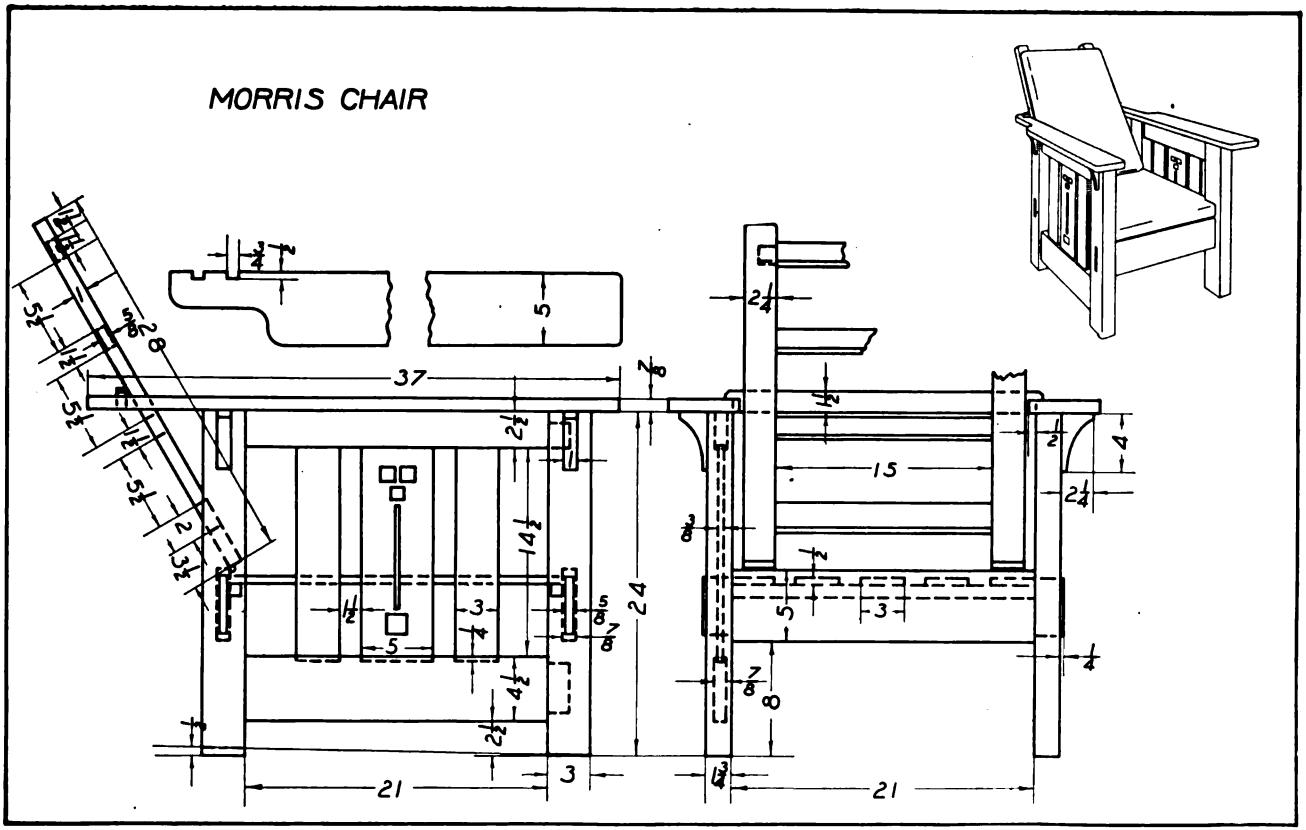

PLATE 33

Digitized by Google

ELECTRIC READING LAMP

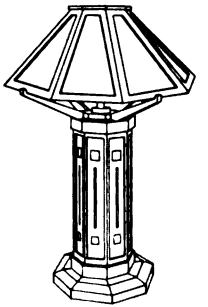

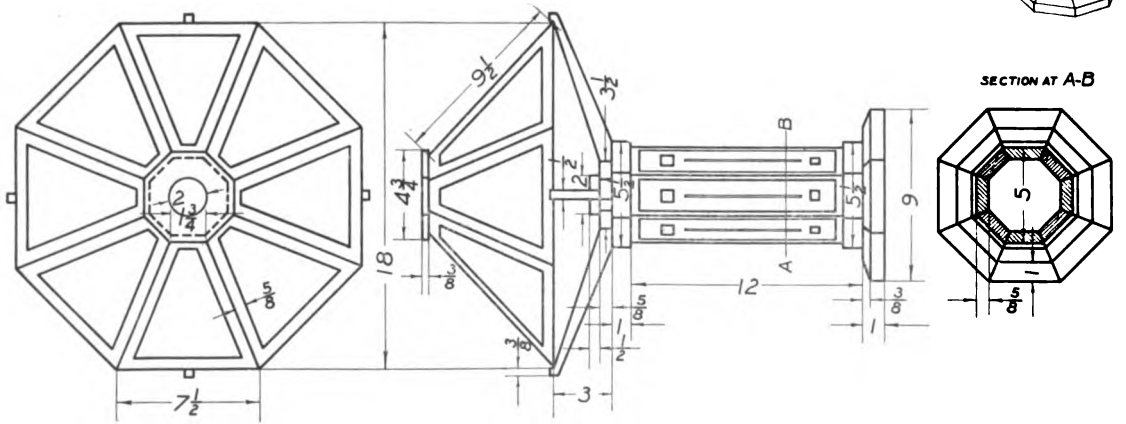

PLATE 34

Digitized by Google

PEDESTAL

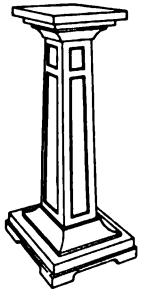

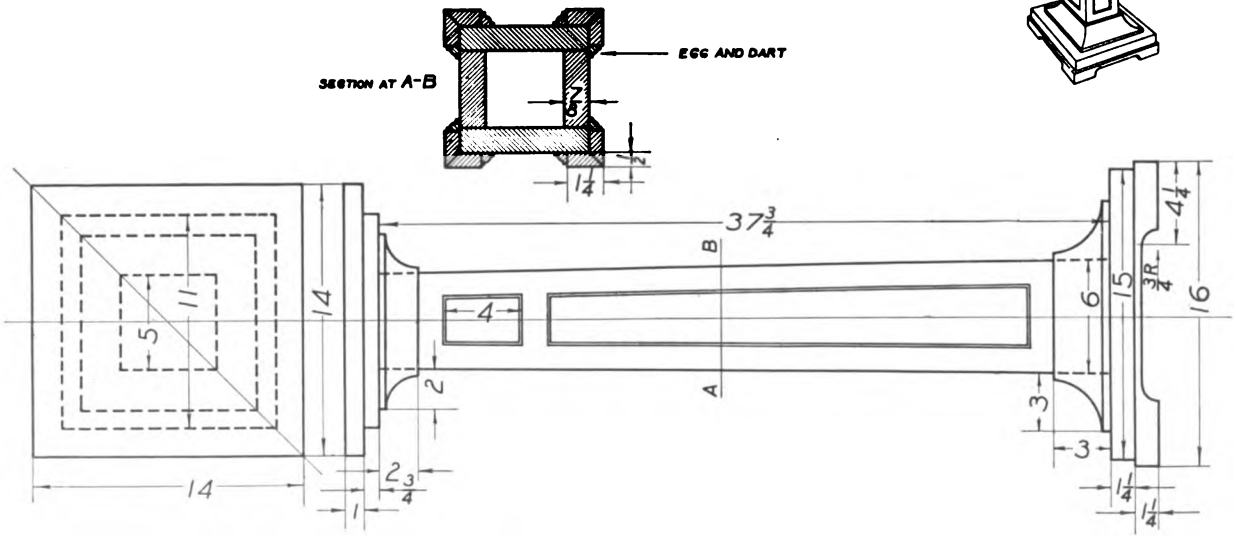

PLATE 35

Digitized by Google

OCCASIONAL ROCKER

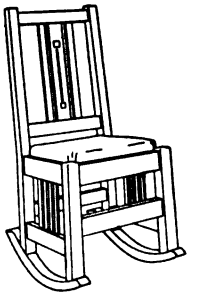

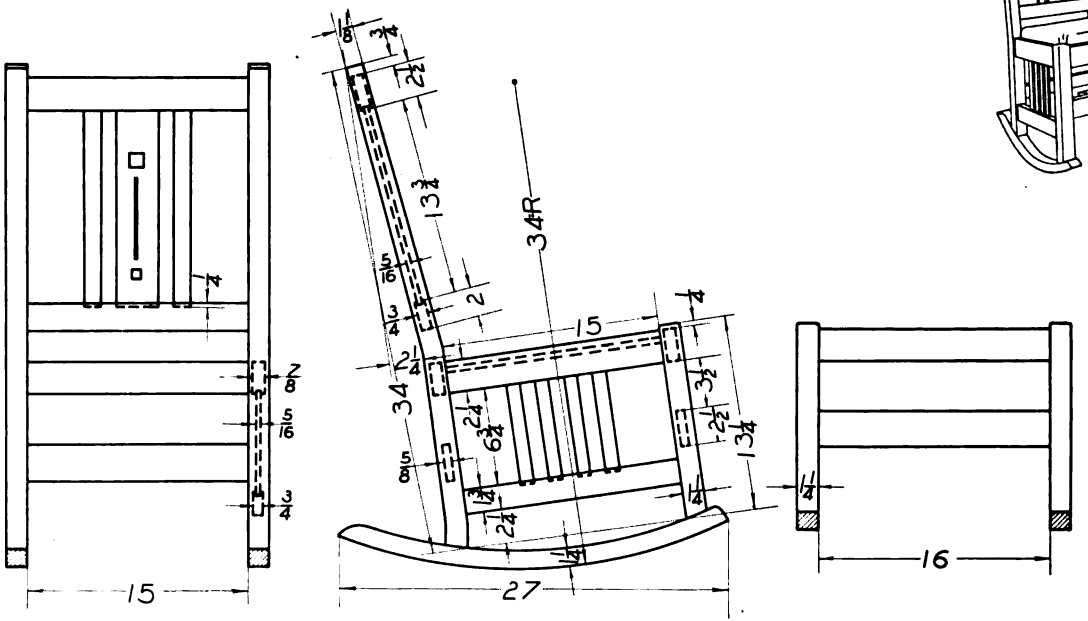

PLATE 36

Digitized by Google

MISSION CHAIR

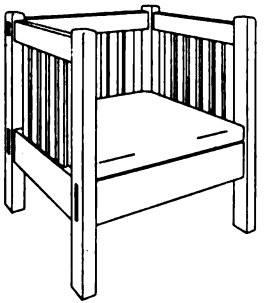

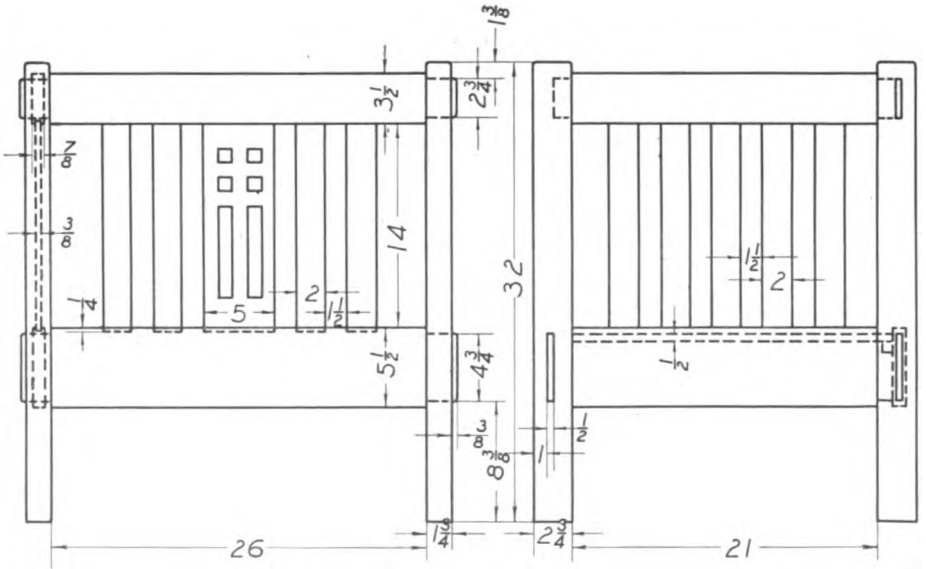

PLATE 37

Digitized by Google

DROP LEAF TABLE

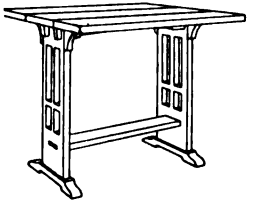

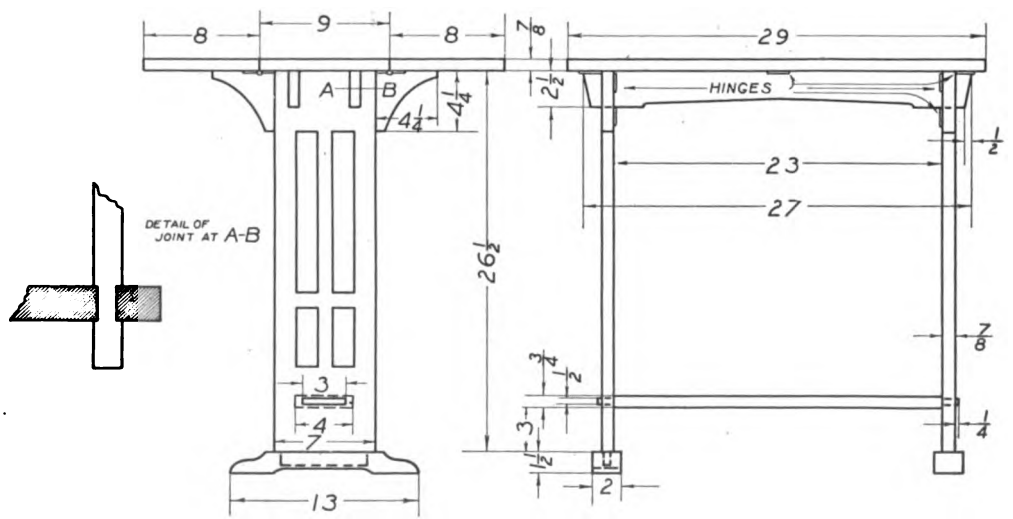

PLATE 38

Digitized by Google

EXERCISE - PREPARATORY TO GROUP X

MORTISE AND TENON - RABBETED

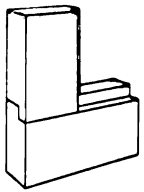

HAUNCHED MORTISE AND TENON - GROOVED

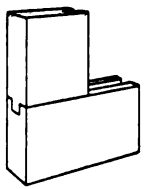

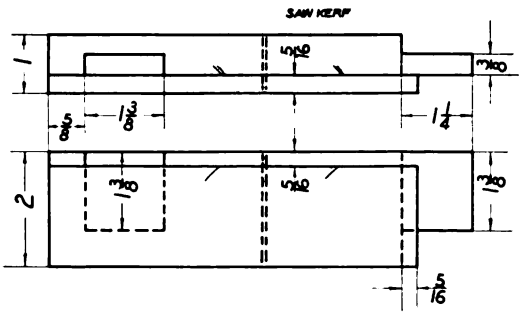

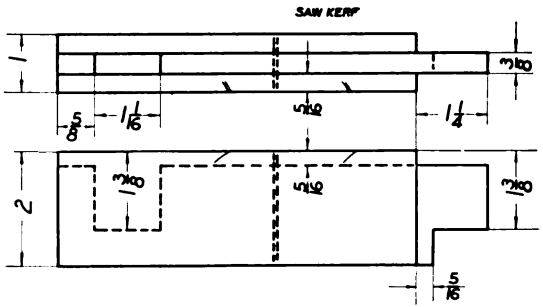

Digitized by Google

EXERCISE - PREPARATORY TO GROUP X

THRU MULTIPLE DOVETAIL

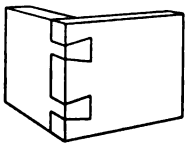

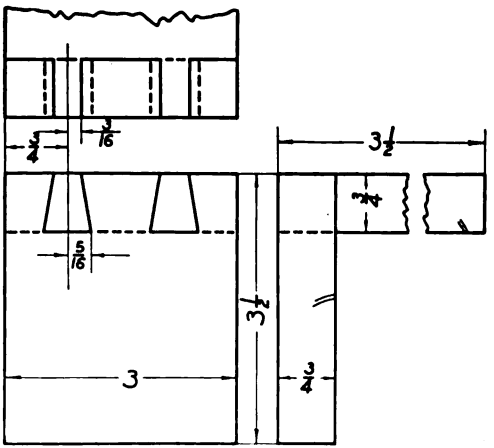

HALF-BLIND DOVETAIL

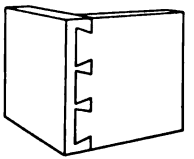

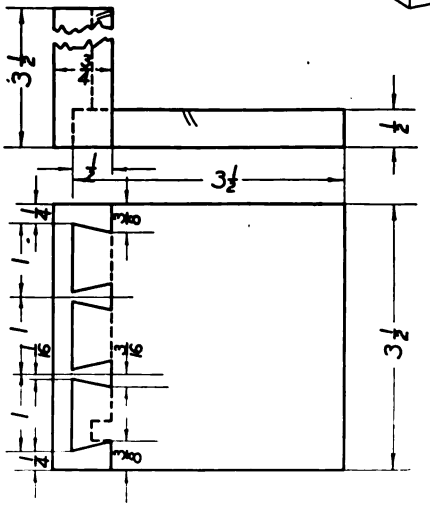

PLATE 40

Digitized by Google

WASTE PAPER BOX

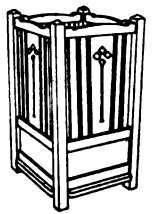

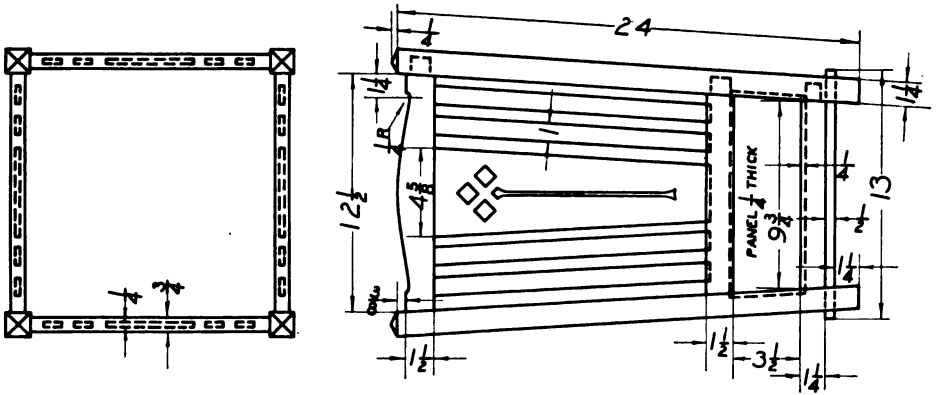

PLATE 41

Digitized by Google

WALL CABINET

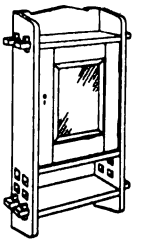

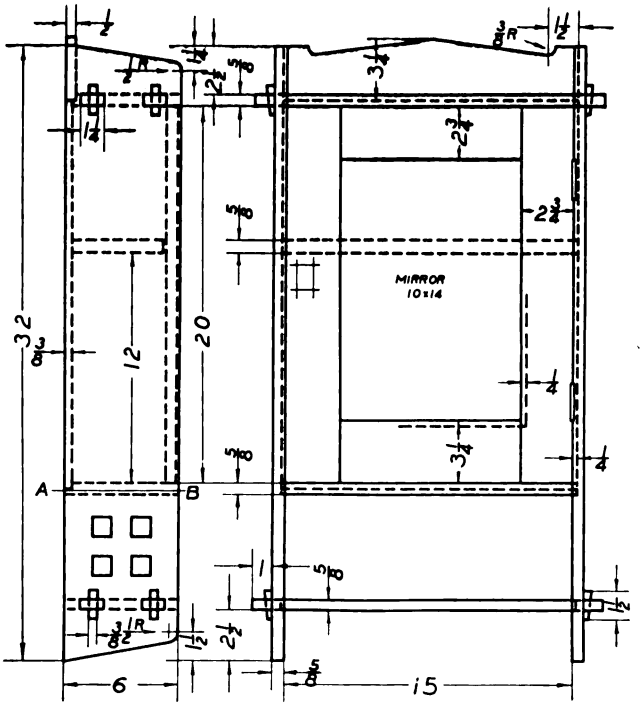

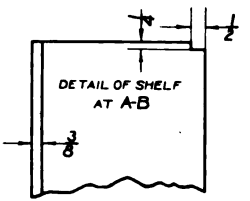

PLATE 42

Digitized by Google

TELEPHONE TABLE

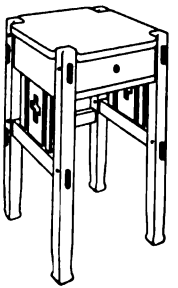

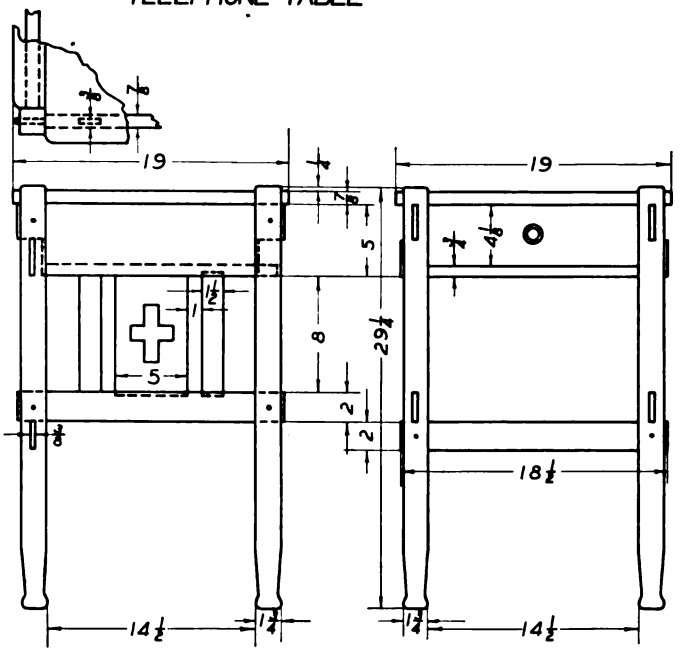

PLATE 43

Digitized by Google

SEWING CABINET

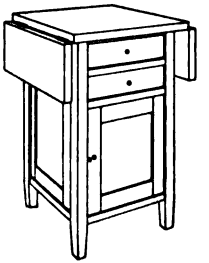

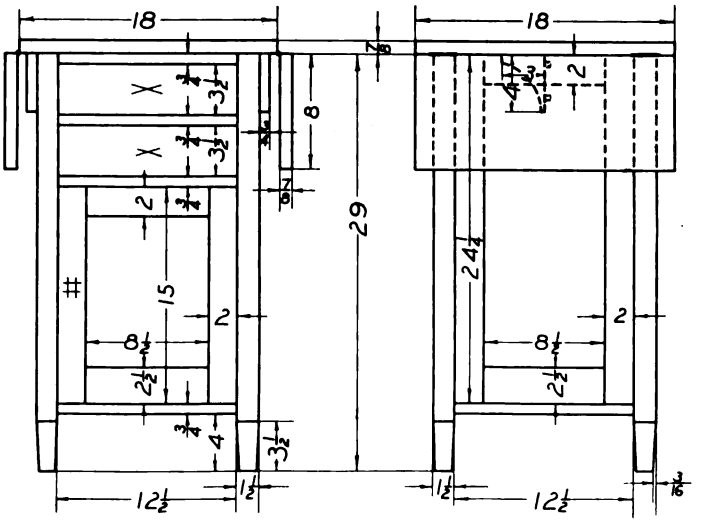

PLATE 44

Digitized by Google

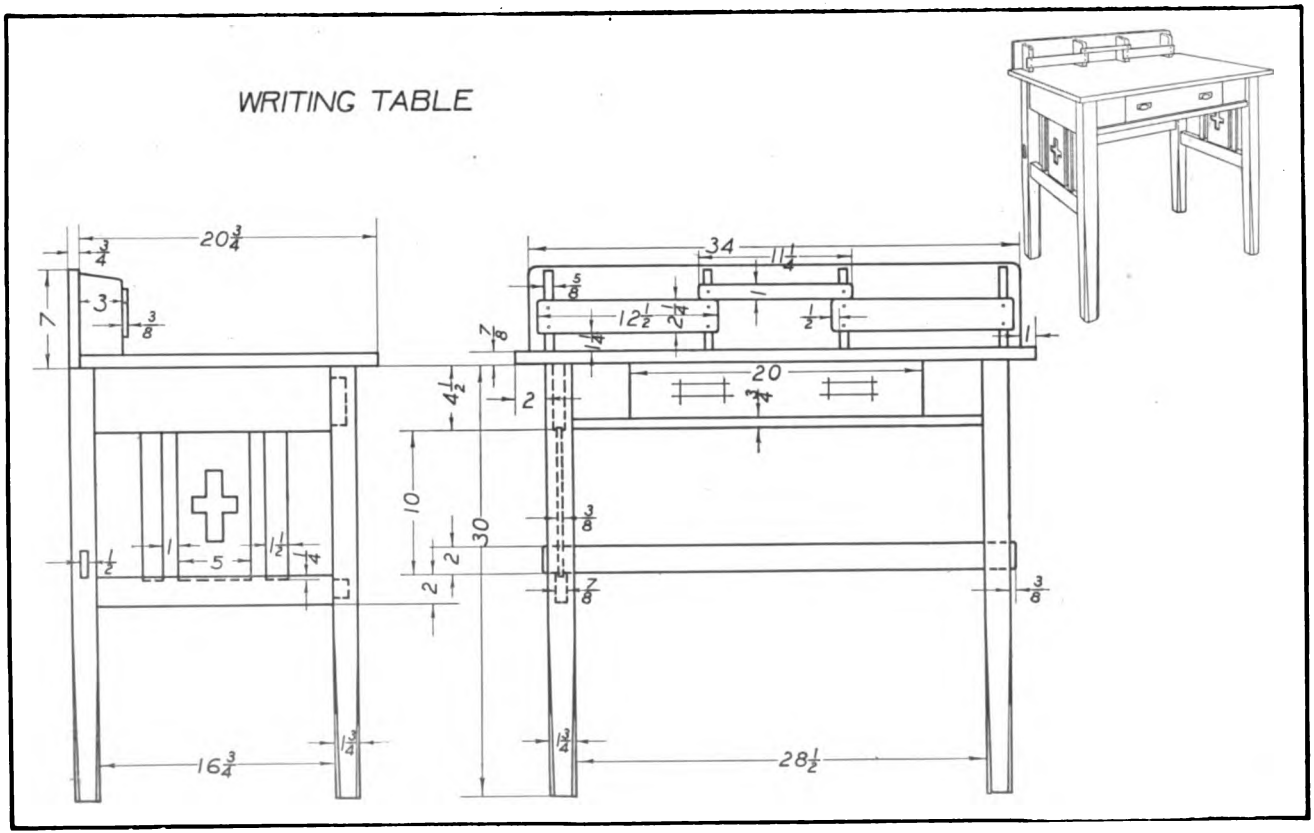

PLATE 45

Digitized by Google

CHAFING DISH STAND

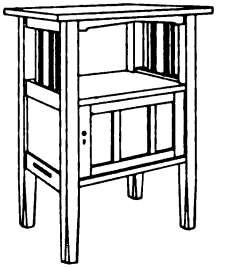

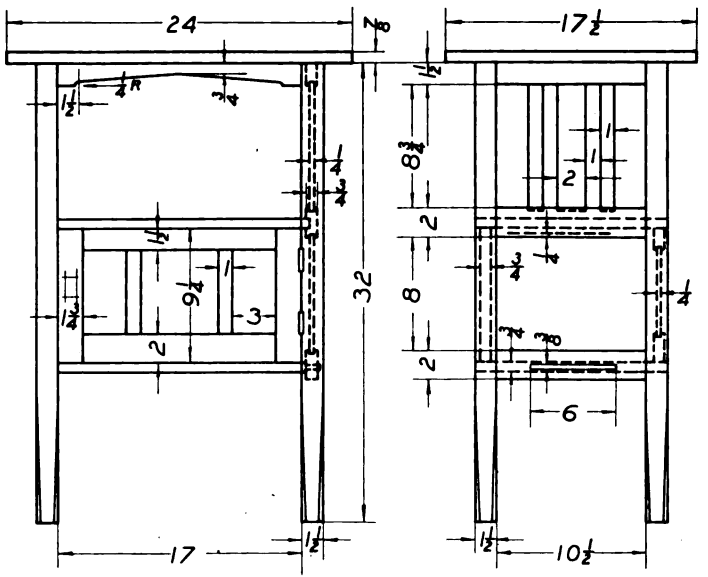

PLATE 46

Digitized by Google

CABINET

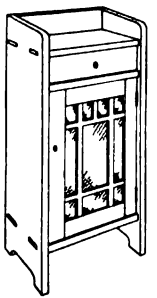

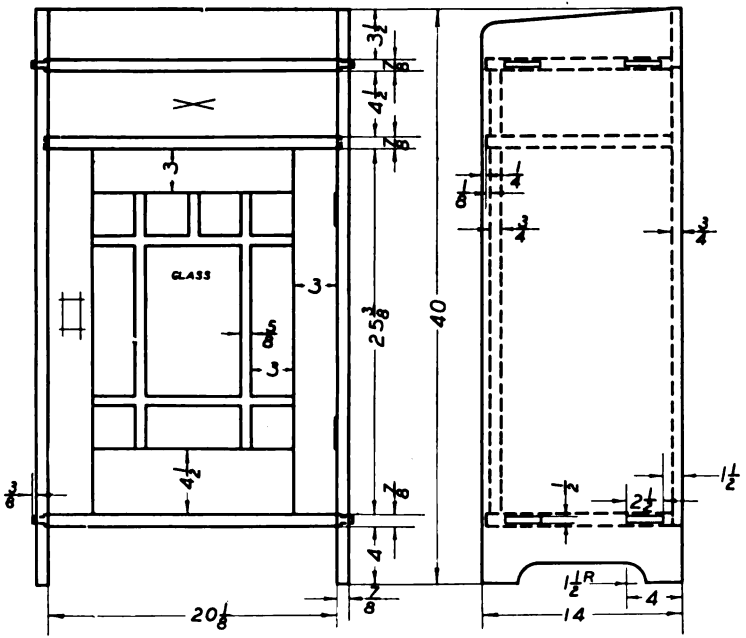

PLATE 47

Digitized by Google

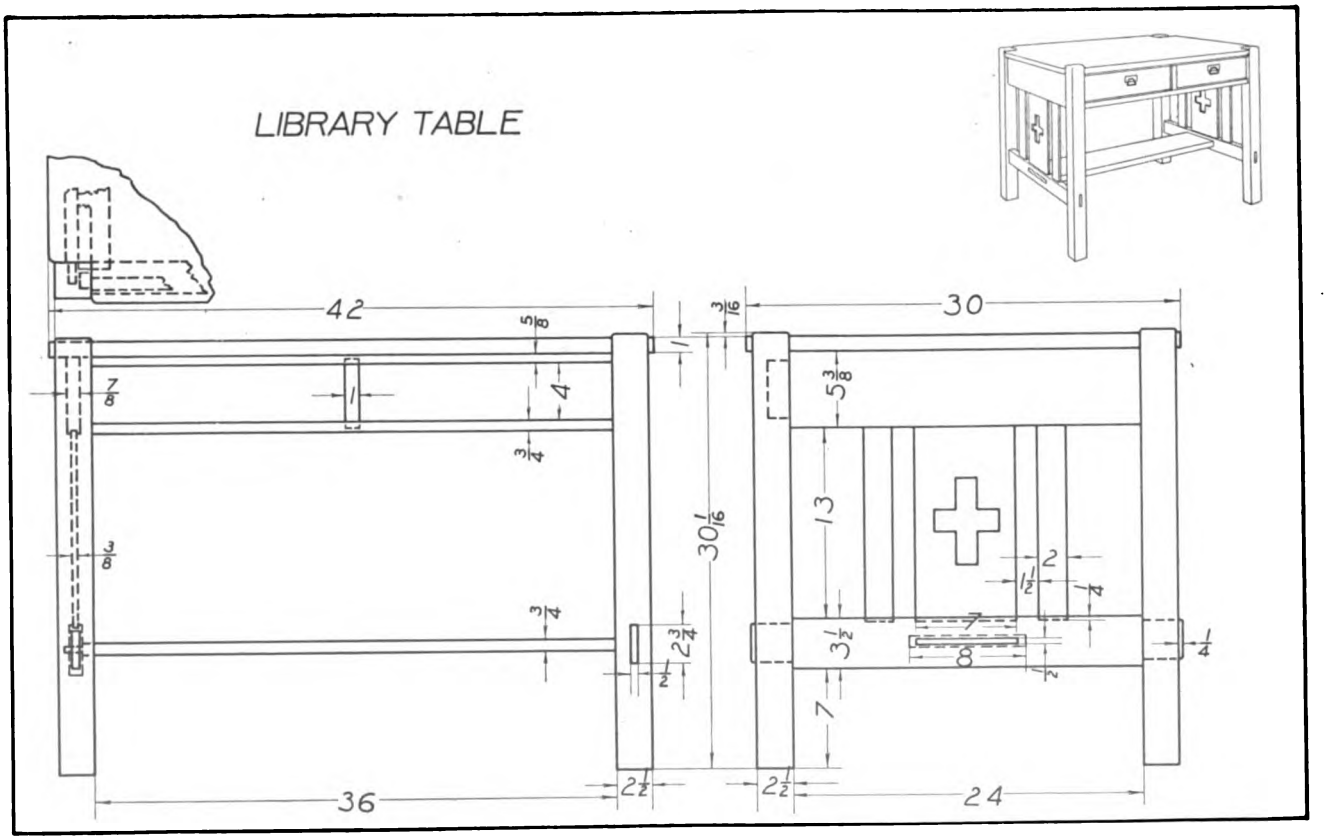

PLATE 48

Digitized by Google

WRITING DESK

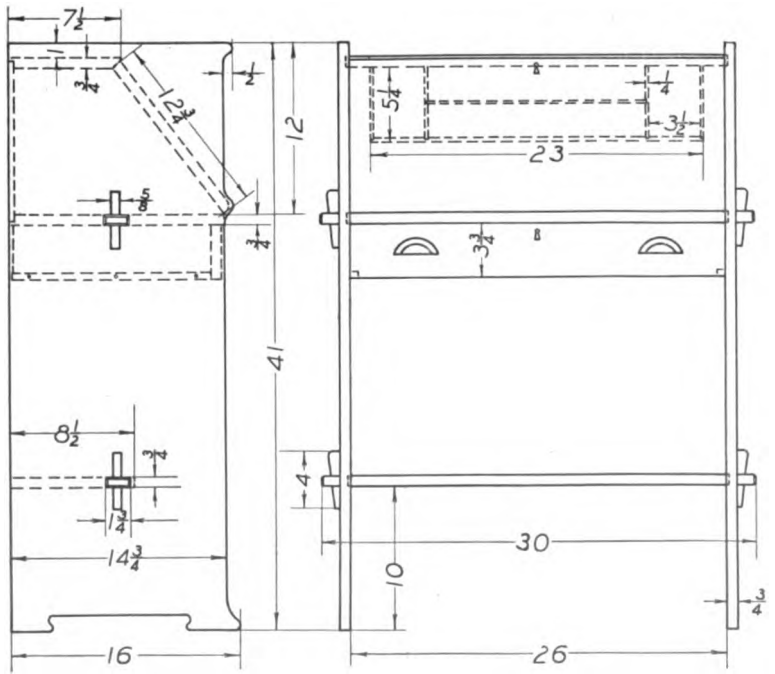

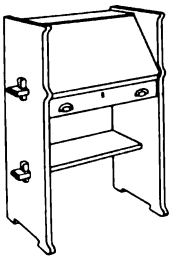

COMMERCIAL DESIGN.

PLATE 49

Digitized by Google

DRESSING TABLE

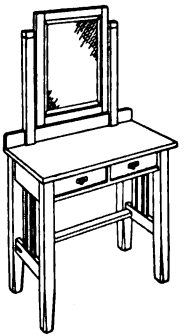

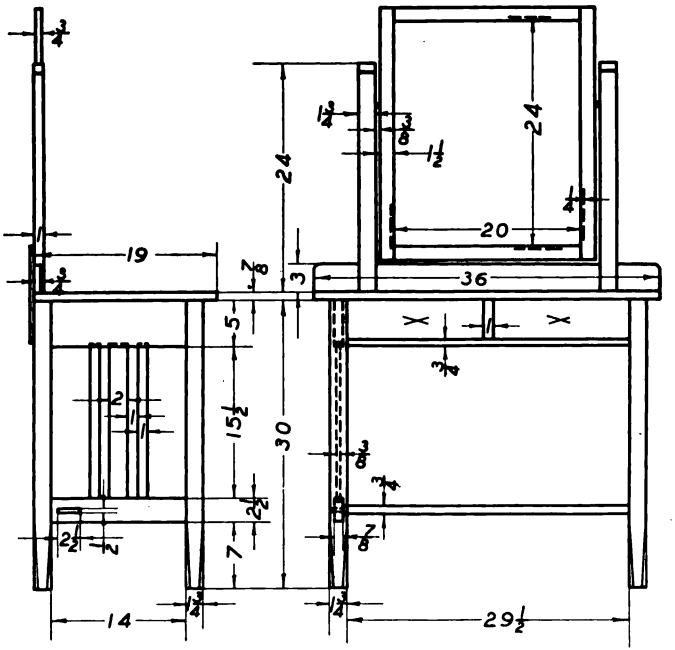

PLATE 50

Digitized by Google

LINEN CHEST

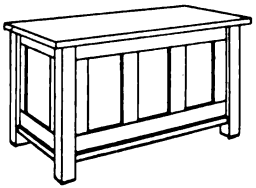

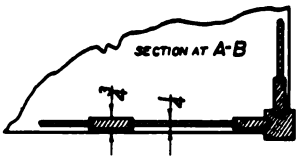

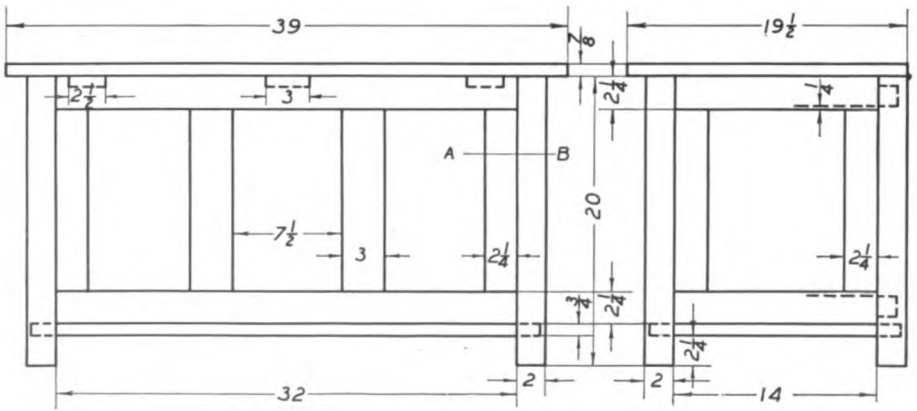

PLATE 51

Digitized by Google

TEXTBOOKS *of* MERIT *for* STUDENTS USE

ESSENTIALS OF WOODWORKING. By Ira S. Griffith A textbook written especially for grammar and high school students. The standard textbook on elementary woodworking. A clear and comprehensive treatment of woodworking tools, materials, and processes, to supplement, but not to take the place of the instructions given by the teacher. The book does not contain a course of models; it may be used with any course. Price, 75 cents.

PROBLEMS IN WOOD-TURNING. By Fred D. Crawshaw. In the first place this book is a textbook on the science and art of wood-turning, illustrated by fifty pen sketches. In the second place it is a book of problems—25 plates covering spindle, faceplate, and chuck turning. It gives the mathematical basis for the cuts used in turning. In the third place it is a helpful discussion of the principles of design as applied to objects turned in wood. A valuable textbook for students' use. Price, 80 cents.

WORKSHOP NOTE-BOOK—WOODWORKING. By Greene. A note-book which furnishes a few general and extremely important directions about tools and processes; and provides space for additional notes and working drawings. It is essentially a collection of helps, ideas, hints, questions, facts, illustrations, etc. The note-book is full of suggestions; shows a keen insight into subject matter and teaching methods and is an effective teaching tool. 15 cents.

WOODWORK FOR BEGINNERS. By Ira S. Griffith. A grammar grade textbook. A clear and simple treatment of the fundamental facts regarding tools, materials and processes as presented in well organized courses in the seventh and eighth grades. Not elaborate yet it meets all requirements. It is well illustrated and is convenient—pocket size. Price, 50 cents.

PROBLEMS IN MECHANICAL DRAWING. By Charles A. Bennett. A students' textbook consisting of 80 plates of problems, classified into groups according to principle and arranged according to difficulty of solution. The problems have been selected with reference to the formation of good habits in technique, the interest of the pupils and the subjects generally included in a first-year high school course. Each problem is given unsolved and therefore in proper form to hand to the pupil for solution. Price, 75 cents.

MECHANICAL DRAFTING. By H. W. Miller. A textbook on mechanical drawing, and advanced high school students. It supplements the work of the instructor in such a way as to reduce lecture work to a minimum. It shows a wise selection of material, a keen insight into the work of the draftsman, and a thoro knowledge of the principles and methods of teaching. Above all it is a practical treatment of subject matter and a students' text easily adaptable to varied schools and conditions. Price, $1.50.

GRAMMAR GRADE PROBLEMS IN MECHANICAL DRAWING. By Charles A. Bennett. A remarkably simple and carefully graded textbook on the fundamentals of mechanical drawing. Its use in the 7th and 8th grades insures the early formation of correct habits of technique, develops the constructive imagination and teaches the reading of working drawings. In the hands of students, work in mechanical drawing can be advanced from one to two years. Price, 38 cents.

DEMONSTRATIONS IN WOODWORK. By Clinton S. Van Deusen. A successful textbook for country schools, consolidated rural schools and grade schools. It consists of a series of leaflets each describing in detail the process of making one project. Each leaflet shows a photograph of the project in use and a working drawing and numerous illustrations of the tool processes required to construct it. The descriptions are unusually clear and well organized step by step. Published in complete sets; I, II and III. Price per set, 25 cents. Ring binder to hold all sets, 40 cents.

WOODWORK FOR SECONDARY SCHOOLS. By Ira S. Griffith. The most complete and comprehensive textbook on secondary school woodwork ever published. Treats of Common Woods—Tools and Processes—Woodworking Machines—Joinery—Wood Turning—Inlaying and Wood Carving—Wood Finishing — Furniture Construction — Pattern-Making. Although written for the student, every teacher of high school or normal school woodwork will find this text a valuable and necessary volume for reference use. It contains 370 pages and 580 special illustrations. Price, $1.75.

PUBLISHED BY THE MANUAL ARTS PRESS, PEORIA, ILLINOIS

Digitized by Google

Woodworking Projects---Working Drawings Ready for Use

PROJECTS FOR BEGINNING WOODWORK AND MECHANICAL DRAWING. By Ira S. Griffith. A work book for the use of students in grammar grade classes. It consists of working drawings and working directions. The projects are such as have proven of exceptional service where woodworking and mechanical drawing are taught in a thoro, systematic manner in the seventh and eighth grades. The aim has been to provide successful rather than unique problems. The 50 projects in the book have been selected and organized with the constant aim of securing the highest educational results. The book is especially suited for use in connection with "Essentials of Woodworking" by the same author. Price, 75 cents.

FURNITURE MAKING—ADVANCED PROJECTS IN WOODWORK. By Ira S. Griffith. This book is similar to "Projects for Beginning Woodwork and Mechanical Drawing," but is suited to high school needs. It consists of fifty plates of problems and accompanying notes. It is essentially a collection of problems in furniture making selected or designed with reference to school use. On the plate with each working drawing is a good perspective sketch of the completed object. In draftsmanship and refinement of design these problems are of superior quality. It is in every respect an excellent collection. Price, 75 cents.

SHOP PROBLEMS. By Albert F. Siepert. A new departure in helps for teachers of the manual arts. It is a portfolio of tracings—working drawings of projects printed on tracing paper ready to be blue printed for students use. The problems include a wide variety, many new and all of good design. Published in series 1, 2 and 3. Price per series, 30 cents.

SELECTED SHOP PROBLEMS. By George A. Seaton. A collection of sixteen problems in woodworking. Each problem has been put to the test and has proven satisfactory to the teacher who designed it and to the pupil who made it. Price, 20 cents.

PROBLEMS IN FURNITURE MAKING. By Fred D. Crawshaw. The revised and enlarged edition of this well known book contains 43 full page working drawings of articles of furniture. Every piece shown is suitable for construction in high school classes and is appropriate and serviceable in the home. In addition to the working drawings, there is a perspective sketch of each article completed. There are 36 pages of text giving notes on the construction of each project, chapters on the "Design," and "Construction" of furniture and one on "Finishes." The last chapter describes 15 methods of wood finishing, all adapted for use on furniture. Price, $1.00.

PROBLEMS IN WOODWORKING. By M. W. Murray. A convenient collection of good problems consisting of forty plates of working drawings, of problems in bench work that have been successfully worked out by boys in one of the grades from seven to nine, inclusive. Price, 75 cents.

PROBLEMS IN FARM WOODWORK. By Samuel A. Blackburn. A book of working drawings of 100 practical problems relating to agriculture and farm life. Especially valuable to the student or teacher of agriculture or manual arts in rural schools and in high schools in agricultural communities, and to the boy on the farm. There are 60 full-page plates of working drawings, each accompanied by a page or more of text treating of "Purpose," "Material," "Bill of Stock," "Tools," "Directions," and "Assembly." A wonderfully practical book. Price, $1.00.

MANUAL TRAINING TOYS FOR THE BOYS' WORKSHOP. By H. W. Moore. A popular boys' book that is truly educational. The book contains 111 pages and thirty-five full-page plates of working drawings illustrating 42 projects. All the projects are overflowing with "boy" interest, are well adapted to the upper grades of the elementary school and are new in the manual training shop. The text treats of tools and tool processes and gives instructions for making each project. Price, $1.00.

PUBLISHED BY THE MANUAL ARTS PRESS, PEORIA, ILLINOIS

Digitized by Google

Digitized by Google

Digitized by Google

Digitized by Google

THE UNIVERSITY OF MICHIGAN
GRADUATE LIBRARY

DATE DUE

MAY 14 1979
MAY 17 1979

SEP 09 1979

OCT 11 1979

Digitized by Google

UNIVERSITY OF MICHIGAN
3 9015 02629 2261

BOOK CARD
DO NOT REMOVE
A Charge will be made
if this card is mutilated
or not returned
with the book
GRADUATE LIBRARY
THE UNIVERSITY OF MICHIGAN
ANN ARBOR, MICHIGAN

DO NOT REMOVE
OR
MUTILATE CARD

Digitized by Google

Digitized by Google